ELLIOTT ELECTRIC SUPPLY
We Deliver...Lower Cost, Quality Products, & Personal Service
2310 N. Stallings Dr.
Nacogdoches, TX 75964-0
Phone: 9365697941
Fax: 9365604685



078142 1" PVC TYPE LB CONDULET

MULTIFITTINGS/KRALOY

Catalog Number	078142
Manufacturer	MULTIFITTINGS/KRALOY
Description	LB10 1" PVC TYPE LB ACCESS FITTING KRALOY
Weight per unit	0.4100 (lbs/each)
Product Category	Boxes & Covers

Descriptions

Description	1" PVC TYPE LB CONDULET
Features	PRODUCT LINE: Kraloy Rigid PVC Fittings includes adapters, couplings, elbows, access fittings, boxes, cover plates, expansion fittings and conduit spacers - virtually any fitting required to complete the PVC conduit system. Easy installations, the ability to perform in demanding environments and labor savings are the reasons nonmetallic conduit fittings are increasingly the fitting of choice. FEATURES: Lightweight yet offers high impact and tensile strength;Chemical resistant to a wide range of acids, al
Long Description	LB10 1" PVC TYPE LB ACCESS FITTING KRALOY
Product Type	1" PVC Type LB Access Fitting Kraloy
Extra Long Description	MFIT 078142 1" PVC TYPE LB ACCESS F

Manufacturer Information

Brand	Kraloy
	Multi Fittings Corp
GTIN	00622454781429
Manufacturers Part Number	078142
UPC	888636

Taxonomies, Classifications, and Categories

Category Description	PVC CONDULETS
Type	TYPE LB ACCESS FITTING

Packaging

Carton	1
Package	10
Weight Per Each	0.4100 (lbs/each)

Uses, Certifications, and Standards

Standard	CSA C22.2 No. 85;UL 514C

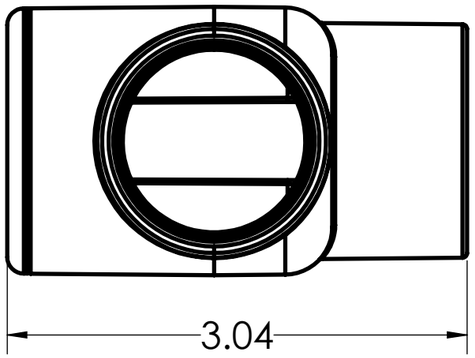

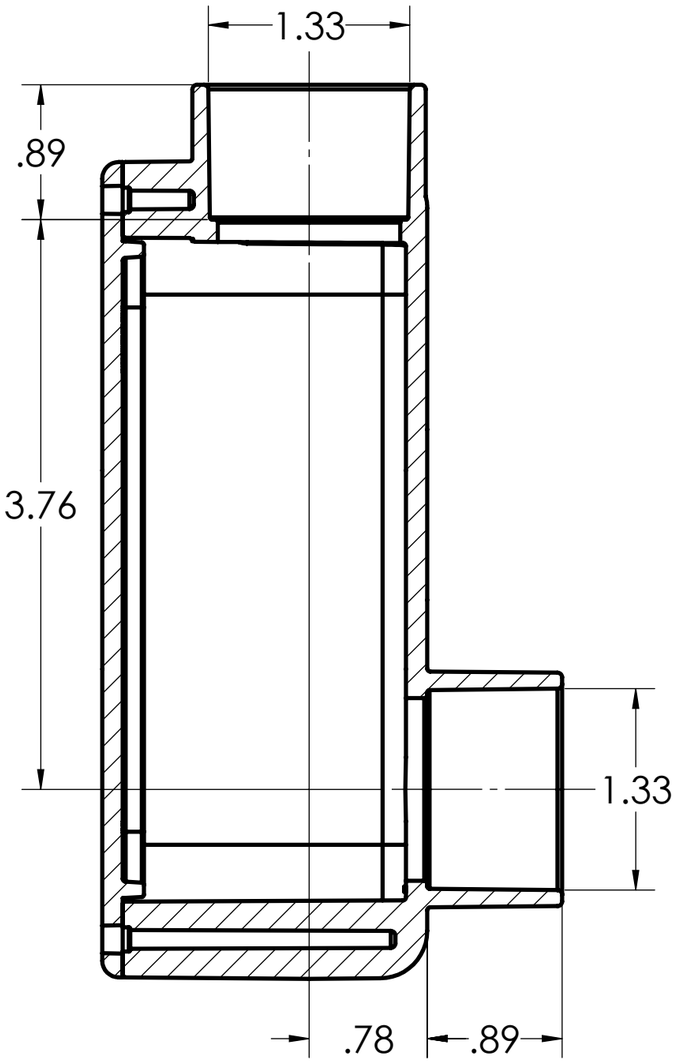

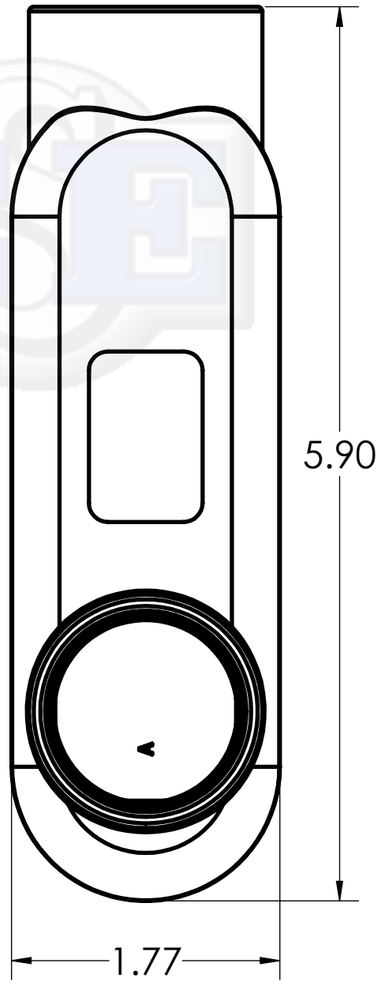

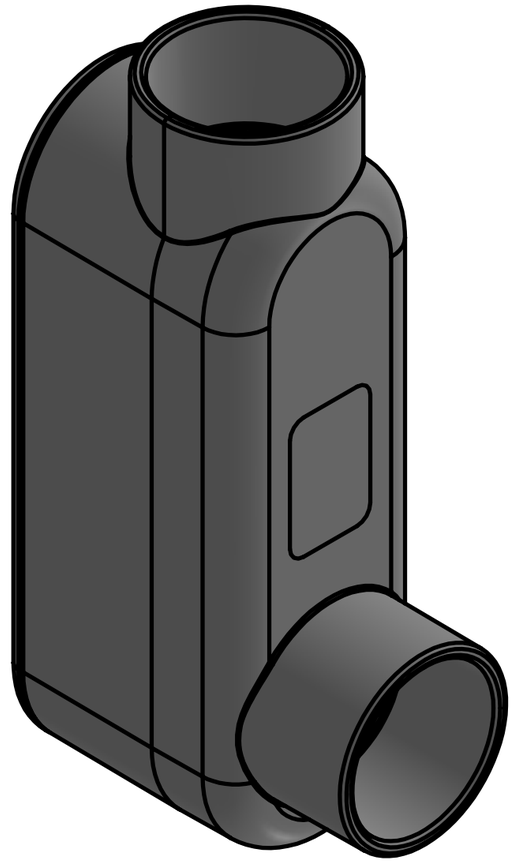

DIMENSIONS SHOWN ARE FOR REFERENCE AND ARE SUBJECT TO CHANGE WITHOUT NOTICE

Kraloy, a Division of Multi Fittings Corp.
under license

PART DESCRIPTION
LB10 1" PVC TYPE LB ACCESS FITTING KRALOY

PRODUCT CODE:		*SCALE:*
078142	*UNIT: INCHES UNLESS DUAL DIMENSION: INCH [METRIC]*	NTS

DRAWN:	A.R.	