ELLIOTT ELECTRIC SUPPLY

We Deliver...Lower Cost, Quality Products, & Personal Service

2310 N. Stallings Dr.
Nacogdoches, TX 75964-0
Phone: 9365697941
Fax: 9365604685



078169 2" PVC TYPE LR CONDULET

MULTIFITTINGS/KRALOY

Catalog Number	078169
Manufacturer	MULTIFITTINGS/KRALOY
Description	LR20 2" PVC TYPE LR ACCESS FITTING KRALOY
Weight per unit	1.7 (lbs/each)
Product Category	Boxes & Covers

Descriptions

Description	2" PVC TYPE LR CONDULET
Features	PRODUCT LINE: Kraloy Rigid PVC Fittings includes adapters, couplings, elbows, access fittings, boxes, cover plates, expansion fittings and conduit spacers - virtually any fitting required to complete the PVC conduit system. Easy installations, the ability to perform in demanding environments and labor savings are the reasons nonmetallic conduit fittings are increasingly the fitting of choice. FEATURES: Lightweight yet offers high impact and tensile strength;Chemical resistant to a wide range of acids, al
Long Description	LR20 2" PVC TYPE LR ACCESS FITTING KRALOY
Product Type	2" PVC Type LR Access Fitting Kraloy
Extra Long Description	MFIT 078169 2" PVC TYPE LR ACCESS F

Manufacturer Information

Brand	Multi Fittings Corp
	Kraloy
GTIN	00622454781696
Manufacturers Part Number	078169
UPC	888636

Taxonomies, Classifications, and Categories

Category Description	PVC ELBOWS
Type	TYPE LR ACCESS FITTING

Packaging

Carton	1
Package	10
Weight Per Each	1.7 (lbs/each)

Uses, Certifications, and Standards

Standard	CSA C22.2 No. 85;UL 514C

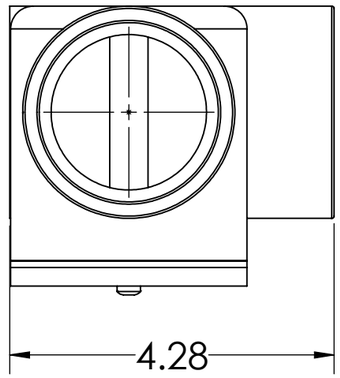

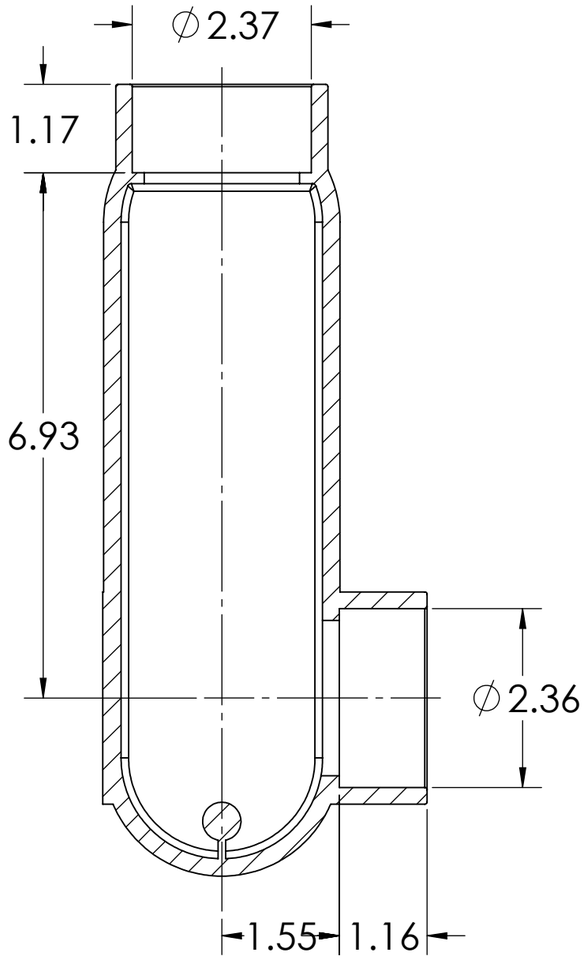

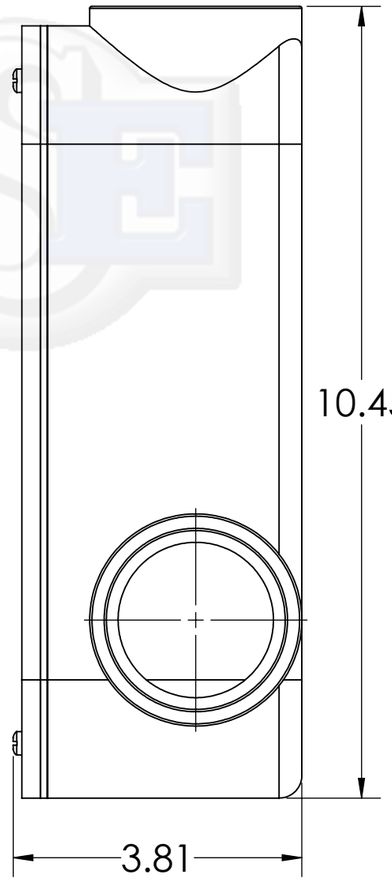

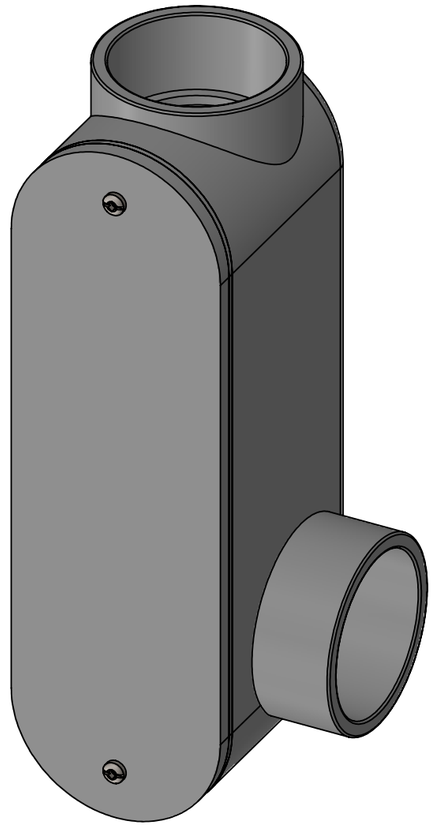

DIMENSIONS SHOWN ARE FOR REFERENCE AND ARE SUBJECT TO CHANGE WITHOUT NOTICE

Kraloy, a Division of Multi Fittings Corp.
under license

PART DESCRIPTION
LR20 2" PVC TYPE LR ACCESS FITTING KRALOY

PRODUCT CODE:		*SCALE:*
078169	*UNIT: INCHES UNLESS DUAL DIMENSION: INCH [METRIC]*	NTS
DRAWN: B.T.		