ELLIOTT ELECTRIC SUPPLY
We Deliver...Lower Cost, Quality Products, & Personal Service
2310 N. Stallings Dr.
Nacogdoches, TX 75964-0
Phone: 9365697941
Fax: 9365604685

078243 4X4X4 PVC JUNCTION BOX

MULTIFITTINGS/KRALOY

Catalog Number	078243
Manufacturer	MULTIFITTINGS/KRALOY
Description	JB444 4"x4"x4" PVC JUNCTION BOX KRALOY
Weight per unit	1.1 (lbs/each)
Product Category	Boxes & Covers

Features

Material	PVC

Dimensions and Weight

Size	4"x4"x4"

Descriptions

Description	4X4X4 PVC JUNCTION BOX
Features	PRODUCT LINE: Kraloy Rigid PVC Fittings includes adapters, couplings, elbows, access fittings, boxes, cover plates, expansion fittings and conduit spacers - virtually any fitting required to complete the PVC conduit system. Easy installations, the ability to perform in demanding environments and labor savings are the reasons nonmetallic conduit fittings are increasingly the fitting of choice. FEATURES: Lightweight yet offers high impact and tensile strength;Chemical resistant to a wide range of acids, al
Long Description	JB444 4"x4"x4" PVC JUNCTION BOX KRALOY
Product Type	4"X4"X4" PVC Junction Box Kraloy
Extra Long Description	MFIT 078243 4"x4"x4" PVC JUNCTION B

Manufacturer Information

Brand	Multi Fittings Corp
	Kraloy
GTIN	00622454782433
Manufacturers Part Number	078243
UPC	888636

Taxonomies, Classifications, and Categories

Category Description	PVC BOXES
Type	JUNCTION BOX

Packaging

Carton	1
Package	10
Weight Per Each	1.1 (lbs/each)

Uses, Certifications, and Standards

Standard	CSA C22.2 No. 40;UL 50;UL 50E

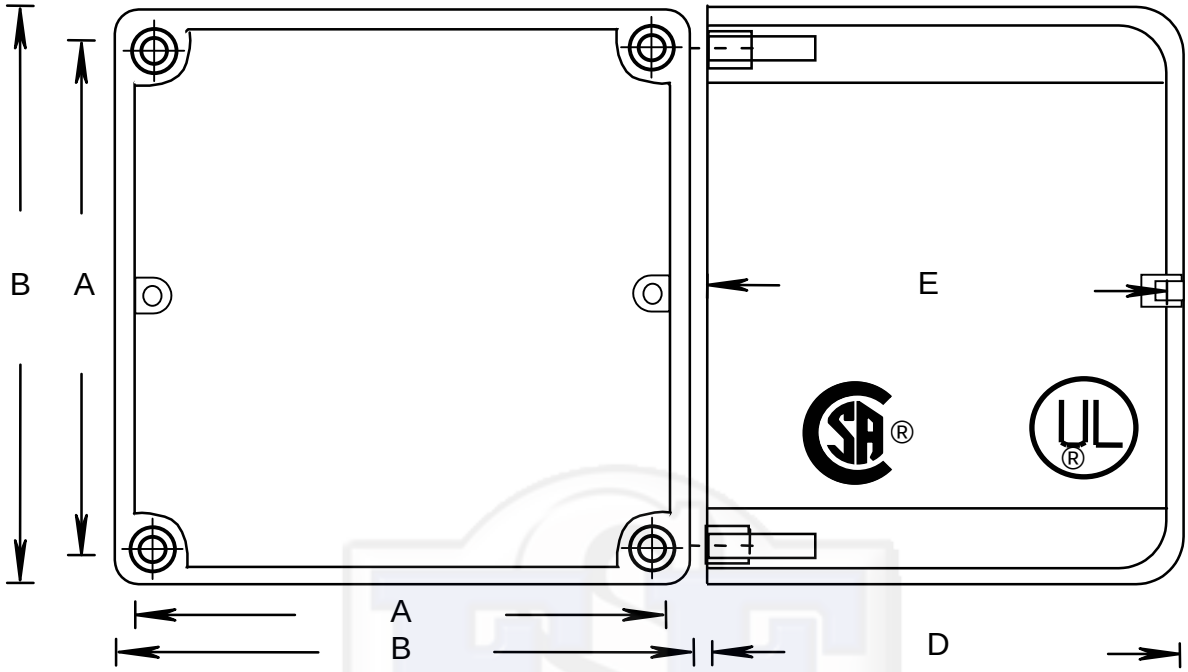

PART NUMBER	NOMINAL SIZE (in)	NOMINAL SIZE (mm)	A (in)	A (mm)	B (in)	B (mm)	D (in)	D (mm)	E (in)	E (mm)
JB 444	4	103	4.000	102	4.375	111	4.187	106	4.000	102

PART NUMBER	NOMINAL SIZE (in)	NOMINAL SIZE (mm)	GASKET CODE	INSERT CODE	SCREW CODE	M.FEET CODE	VOLUME (cu. in)	VOLUME (cu. cm)
JB 444	4	103	072491	072538(4) 072539(2)	072522(4) 072513(2)	097747	56.0	917

COVER DIMENSIONS

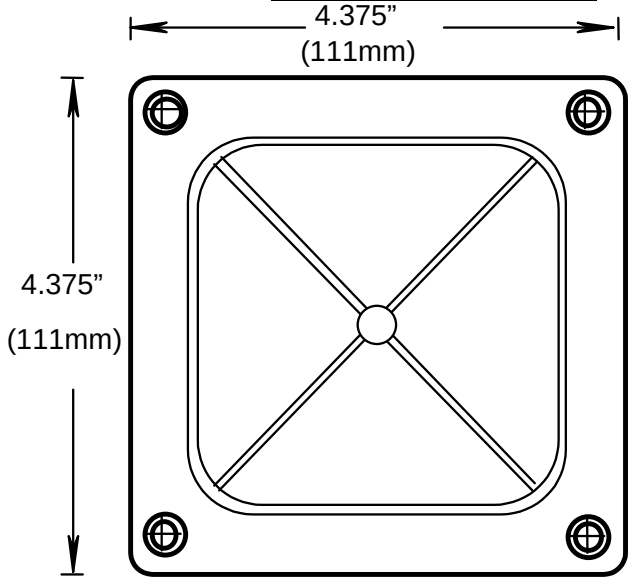

Filename: KRALOY-24.doc
Directory: \\Bersrvbdc\bergen\QC MANUAL
Template: C:\Documents and Settings\joelau\Application Data\Microsoft\Templates\Normal.dot
Title: SOCKET DIMENSION
Subject:
Author: joe lau
Keywords:
Comments:
Creation Date: 1/2/2001 10:26 AM
Change Number: 11
Last Saved On: 4/14/2004 3:45 PM
Last Saved By: Joe Lau
Total Editing Time: 11 Minutes
Last Printed On: 8/8/2005 12:35 PM
As of Last Complete Printing
Number of Pages: 1
Number of Words: 56 (approx.)
Number of Characters: 324 (approx.)