ELLIOTT ELECTRIC SUPPLY
We Deliver...Lower Cost, Quality Products, & Personal Service
2310 N. Stallings Dr.
Nacogdoches, TX 75964-0
Phone: 9365697941
Fax: 9365604685



078545 2" SCH40 90D PVC ELBOW

MULTIFITTINGS/KRALOY

Catalog Number	078545
Manufacturer	MULTIFITTINGS/KRALOY
Description	40STD2090 2"x90D PVC STD ELBOW SPxSP SCH40 KRALOY
Weight per unit	2.8 (lbs/each)
Product Category	Boxes & Covers

Features

Material	PVC
Connection	SPxSP

Descriptions

Description	2" SCH40 90D PVC ELBOW
Features	PRODUCT LINE: Kraloy Rigid PVC Fittings includes adapters, couplings, elbows, access fittings, boxes, cover plates, expansion fittings and conduit spacers - virtually any fitting required to complete the PVC conduit system. Easy installations, the ability to perform in demanding environments and labor savings are the reasons nonmetallic conduit fittings are increasingly the fitting of choice. FEATURES: Lightweight yet offers high impact and tensile strength;Chemical resistant to a wide range of acids, al
Long Description	40STD2090 2"x90D PVC STD ELBOW SPxSP SCH40 KRALOY
Product Type	2"X90D PVC STD Elbow SPXSP SCH40 Kraloy
Extra Long Description	MFIT 078545 2"x90D PVC STD ELBOW SP

Manufacturer Information

Brand	Multi Fittings Corp
	Kraloy
GTIN	00622454785458
Manufacturers Part Number	078545
UPC	888636

Taxonomies, Classifications, and Categories

Category Description	PVC ELBOWS
Type	STD ELBOW

Trade Size

Trade Size	2"

Packaging

Carton	1
Package	15
Weight Per Each	2.8 (lbs/each)

Uses, Certifications, and Standards

Standard	UL 651

CSA C22.2 NO211.2 UL 651

RIGID PVC CONDUIT
CONDUIT RIGIDE EN PVC

90° SCH40 BEND PE / COUDE 90° SCH40 BU

ISSUE DATE: DATE D'EMISSION:	2004 02 12
SUPERSEDES: REMPLACE:	2002 12 06

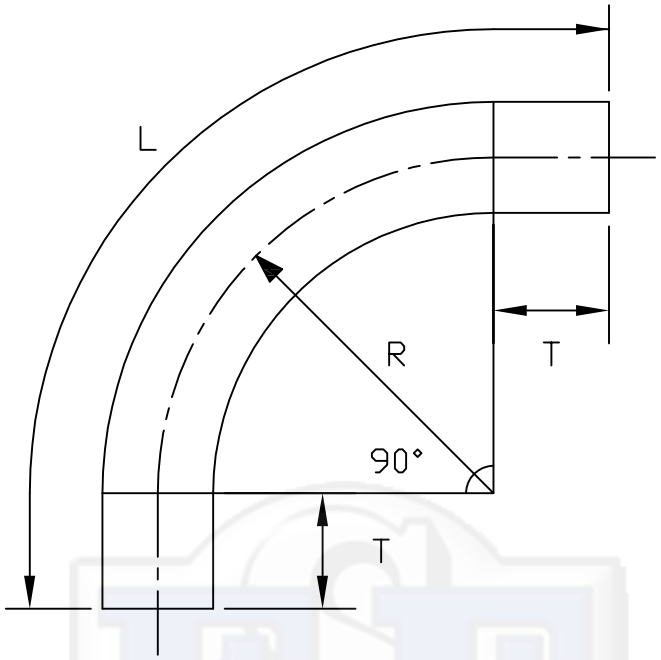

	CODE	Size Grosseur	L Ref.	R Ref.	T Ref.
	# 068574	41mm (1.5")	432mm (17.0")	210mm (8.25")	51mm (2")
KRALOY HALEX	# 068580 # 076114 # 078540 # 078973	16mm (0.5")	241mm (9.50")	102mm (4.0")	41mm (1.60")
KRALOY HALEX	# 068581 # 076115 # 078541 # 078974	21mm (0.75")	309mm (12.167")	114mm (4.50")	64mm (2.50")
KRALOY HALEX	# 068582 # 076116 # 078542 # 078975 088602	25mm (1")	356mm (14.0")	146mm (5.75")	64mm (2.50")
KRALOY HALEX	# 068583 # 076137 # 078543 # 078976	35mm (1.25")	419mm (16.50")	184mm (7.25")	64mm (2.50")
KRALOY HALEX	# 068584 # 076498 # 078544 # 078977	41mm (1.5")	432mm (17.0")	210mm (8.25")	51mm (2.0")
KRALOY HALEX	# 068585 # 078545 # 078978	50mm (2")	530mm (20.875)	241mm (9.50")	76mm (3.0")

#– UL APPROVED / APPROUVES
*– CSA CERTIFIED / CERTIFIE
L– LENGTH OF PIPE BEFORE BENDING / LONGUEUR DU TUYAU AVANT D'ETRE COURBE