# ELLIOTT ELECTRIC SUPPLY

We Deliver...Lower Cost, Quality Products, & Personal Service

2310 N. Stallings Dr.
Nacogdoches, TX 75964-0
Phone: 9365697941
Fax: 9365604685




## 078549 4" SCH40 90D PVC ELBOW PLAIN END

*MULTIFITTINGS/KRALOY*

| | |
|---|---|
| Catalog Number | 078549 |
| Manufacturer | MULTIFITTINGS/KRALOY |
| Description | 40STD4090 4"x90D PVC STD ELBOW SPxSP SCH40 KRALOY |
| Weight per unit | 7.5 (lbs/each) |
| Product Category | Boxes & Covers |

### Features

| | |
|---|---|
| Material | PVC |
| Connection | SPxSP |

### Descriptions

| | |
|---|---|
| Description | 4" SCH40 90D PVC ELBOW |
| Features | PRODUCT LINE: Kraloy Rigid PVC Fittings includes adapters, couplings, elbows, access fittings, boxes, cover plates, expansion fittings and conduit spacers - virtually any fitting required to complete the PVC conduit system. Easy installations, the ability to perform in demanding environments and labor savings are the reasons nonmetallic conduit fittings are increasingly the fitting of choice. FEATURES: Lightweight yet offers high impact and tensile strength;Chemical resistant to a wide range of acids, al |
| Long Description | 40STD4090 4"x90D PVC STD ELBOW SPxSP SCH40 KRALOY |
| Product Type | 4"X90D PVC STD Elbow SPXSP SCH40 Kraloy |
| Extra Long Description | MFIT 078549 4"x90D PVC STD ELBOW SP |

### Manufacturer Information

| | |
|---|---|
| Brand | Multi Fittings Corp |
| | Kraloy |
| GTIN | 00622454785496 |
| Manufacturers Part Number | 078549 |
| UPC | 888636 |

### Taxonomies, Classifications, and Categories

| | |
|---|---|
| Category Description | PVC ELBOWS |
| Type | STD ELBOW |

### Trade Size

| | |
|---|---|
| Trade Size | 4" |

### Packaging

| | |
|---|---|
| Carton | 1 |
| Package | 54 |
| Weight Per Each | 7.5 (lbs/each) |

### Uses, Certifications, and Standards

| | |
|---|---|
| Standard | UL 651 |




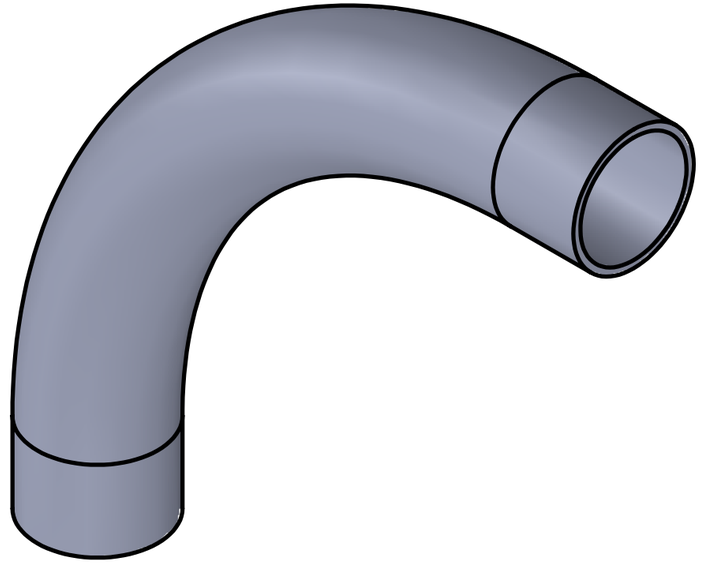

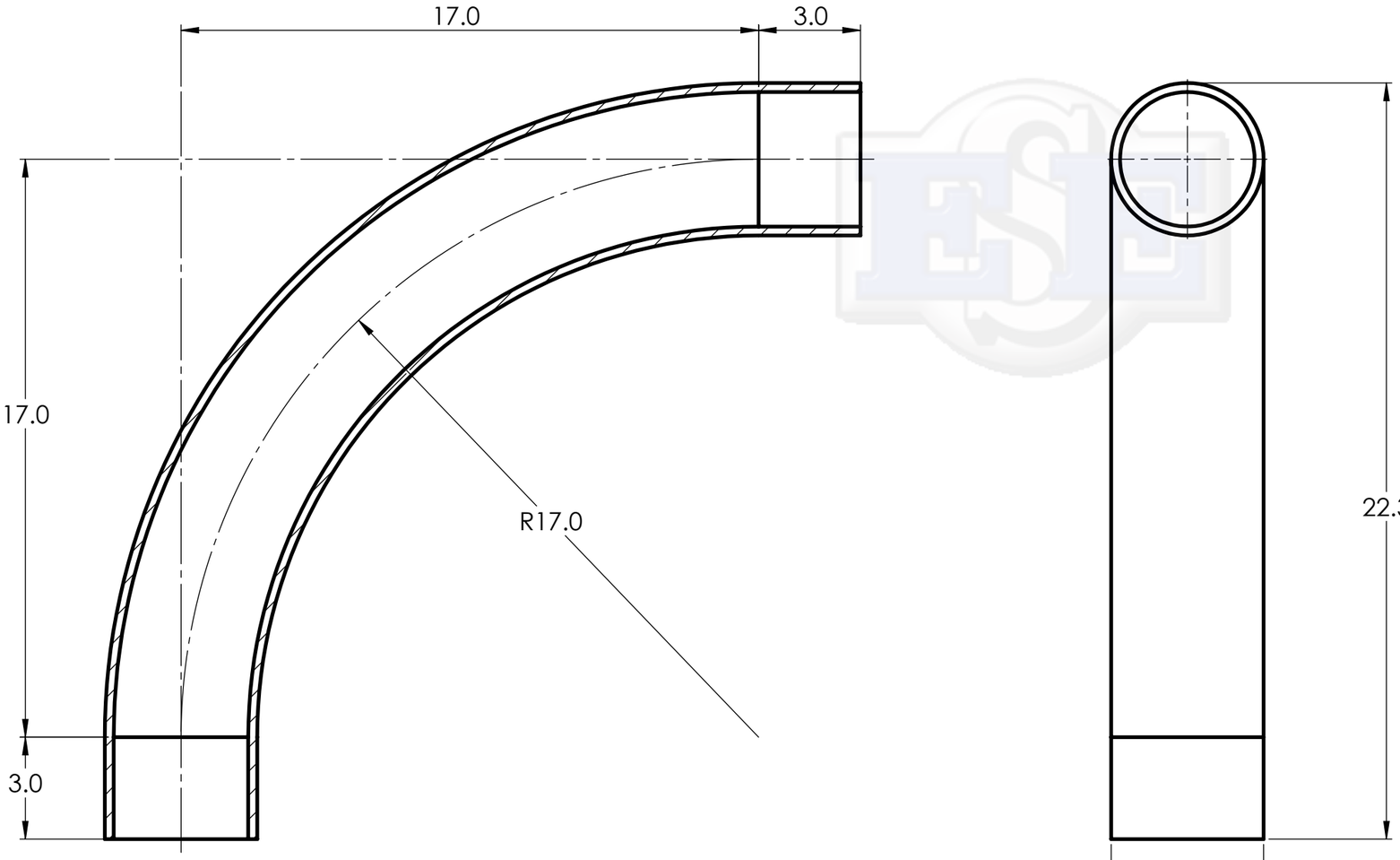





PLASTIC/RUBBER SIZES

SIZES SHOWN ARE FOR REFERENCE
3D MODEL IS TO BE USED FOR
MANUFACTURING / VERIFICATION

ALL CHANGES MUST BE APPROVED AND RECORDED BY ENGINEERING

UNIT: INCHES UNLESS
DUAL DIMENSION: INCH [METRIC]

PROJECTION

**Kraloy, a Division of Multi Fittings Corp.**
**under license**

THIS DRAWING AND ALL TECHNICAL INFORMATION APPEARING HEREON ARE PROPERTY OF MULTI FITTINGS CORP. AND MUST BE KEPT IN CONFIDENCE BY THE RECIPIENT. THE SAME MAY NOT BE USED OR REPRODUCED EITHER IN WHOLE OR IN PART WITHOUT THE EXPRESS CONSENT OF MULTI FITTINGS CORP.

TITLE
40STD4090 4"x90D PVC STD ELBOW SPxSP SCH40 KRALOY

| | NAME | DATE |
|---|---|---|
| PAPER SIZE ANSI B | | |
| DRAWN | | 09/09/2020 |
| APP'D | | |

SCALE: NA

MAT'L:

PART APPEARANCE: COLOR:

SURFACE FINISHES: (UNLESS OTHERWISE NOTED)
INSIDE:
OUTSIDE:
OTHER:

DIMENSIONS ARE IN INCHES TOLERANCES
(UNLESS OTHERWISE SPECIFIED)

| | |
|---|---|
| FRACTIONAL | ± 1/32 |
| X.X | ± 0.015 |
| X.XX | ± 0.010 |
| X.XXX | ± 0.005 |
| ANGULAR | ± .1.0 |

CRITICAL DIMENSIONS ARE SHOWN AS **"X.XX"**

REFERENCE DIMENSIONS ARE SHOWN WITH REF. NOTE

PRODUCT CODE: 078549

PROJECT No.

FILENAME: FOLDER: