ELLIOTT ELECTRIC SUPPLY
We Deliver...Lower Cost, Quality Products, & Personal Service
2310 N. Stallings Dr.
Nacogdoches, TX 75964-0
Phone: 9365697941
Fax: 9365604685



078554 1" SCH40 45D PVC ELBOW

MULTIFITTINGS/KRALOY

Catalog Number	078554
Manufacturer	MULTIFITTINGS/KRALOY
Description	40STD1045 1"x45D PVC STD ELBOW SPxSP SCH40 KRALOY
Weight per unit	0.1800 (lbs/each)
Product Category	Boxes & Covers

Features

Material	PVC
Connection	SPxSP

Descriptions

Description	1" SCH40 45D PVC ELBOW
Features	PRODUCT LINE: Kraloy Rigid PVC Fittings includes adapters, couplings, elbows, access fittings, boxes, cover plates, expansion fittings and conduit spacers - virtually any fitting required to complete the PVC conduit system. Easy installations, the ability to perform in demanding environments and labor savings are the reasons nonmetallic conduit fittings are increasingly the fitting of choice. FEATURES: Lightweight yet offers high impact and tensile strength;Chemical resistant to a wide range of acids, al
Long Description	40STD1045 1"x45D PVC STD ELBOW SPxSP SCH40 KRALOY
Product Type	1"X45D PVC STD Elbow SPXSP SCH40 Kraloy
Extra Long Description	MFIT 078554 1"x45D PVC STD ELBOW SP

Manufacturer Information

Brand	Multi Fittings Corp
	Kraloy
GTIN	00622454785540
Manufacturers Part Number	078554
UPC	888636

Taxonomies, Classifications, and Categories

Category Description	PVC ELBOWS
Type	STD ELBOW

Trade Size

Trade Size	1"

Packaging

Carton	1
Package	50
Weight Per Each	0.1800 (lbs/each)

Uses, Certifications, and Standards

Standard	UL 651

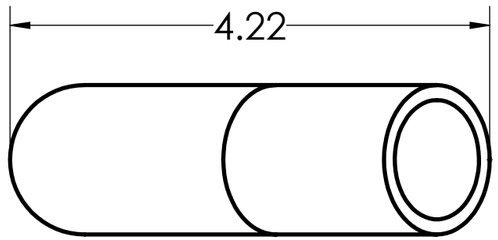

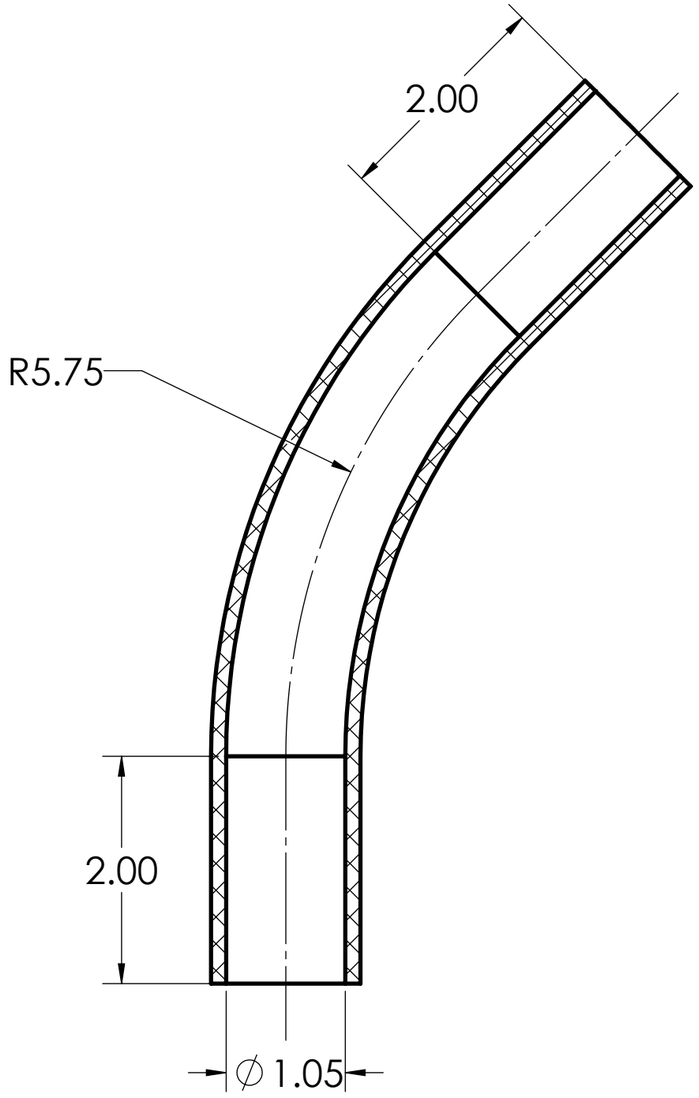

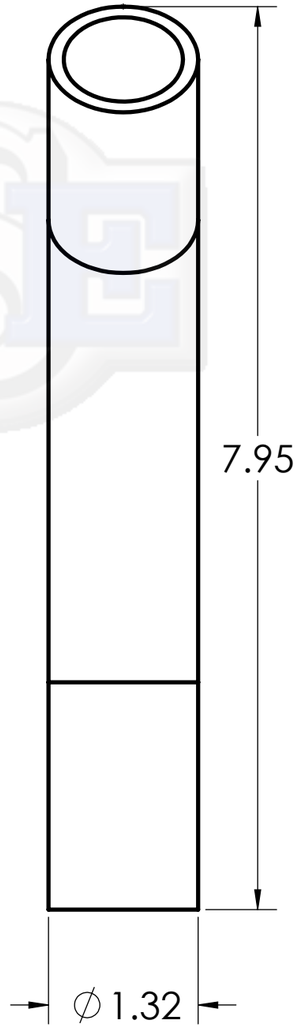

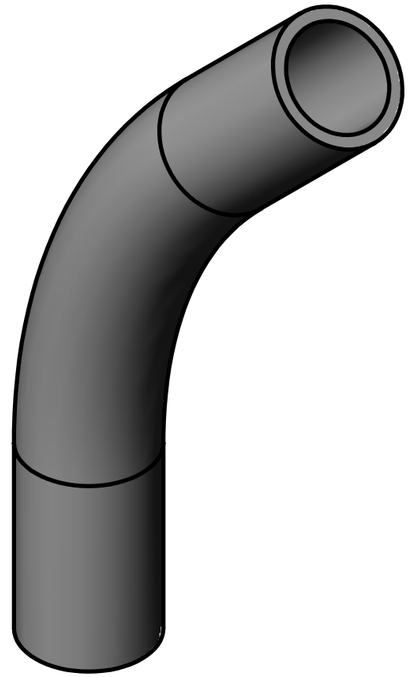

THIS ITEM IS FABRICATED AND AS SUCH MAY HAVE VARYING DIMENSIONS DUE TO DIFFERENT MANUFACTURING PROCESSES

DIMENSIONS SHOWN ARE FOR REFERENCE AND ARE SUBJECT TO CHANGE WITHOUT NOTICE

Kraloy, a Division of Multi Fittings Corp.
under license

PART DESCRIPTION
40STD1045 1"x45D PVC STD ELBOW SPxSP SCH40 KRALOY

PRODUCT CODE:	*UNIT: INCHES UNLESS DUAL DIMENSION: INCH [METRIC]*	*SCALE:*
078554		NTS

DRAWN: A.R.