ELLIOTT ELECTRIC SUPPLY
We Deliver...Lower Cost, Quality Products, & Personal Service
2310 N. Stallings Dr.
Nacogdoches, TX 75964-0
Phone: 9365697941
Fax: 9365604685



078558 2-1/2" SCH40 45D PVC ELBOW

MULTIFITTINGS/KRALOY

Catalog Number	078558
Manufacturer	MULTIFITTINGS/KRALOY
Description	40STD2545 2 1/2"x45D PVC STD ELBOW SPxSP SCH40 KRALOY
Weight per unit	1.4 (lbs/each)
Product Category	Boxes & Covers

Features

Material	PVC
Connection	SPxSP

Descriptions

Features	PRODUCT LINE: Kraloy Rigid PVC Fittings includes adapters, couplings, elbows, access fittings, boxes, cover plates, expansion fittings and conduit spacers - virtually any fitting required to complete the PVC conduit system. Easy installations, the ability to perform in demanding environments and labor savings are the reasons nonmetallic conduit fittings are increasingly the fitting of choice. FEATURES: Lightweight yet offers high impact and tensile strength;Chemical resistant to a wide range of acids, al
Long Description	40STD2545 2 1/2"x45D PVC STD ELBOW SPxSP SCH40 KRALOY
Product Type	2 1/2"X45D PVC STD Elbow SPXSP SCH40 Kraloy
Extra Long Description	MFIT 078558 2 1/2"x45D PVC STD ELBO

Manufacturer Information

Brand	Kraloy
	Multi Fittings Corp
GTIN	00622454785588
Manufacturers Part Number	078558
UPC	888636

Taxonomies, Classifications, and Categories

Category Description	PVC ELBOWS
Type	STD ELBOW

Trade Size

Trade Size	2 1/2"

Packaging

Carton	1
Package	20
Weight Per Each	1.4 (lbs/each)

Uses, Certifications, and Standards

Standard	UL 651

CSA C22.2 NO211.2 UL 651

RIGID PVC CONDUIT
CONDUIT RIGIDE EN PVC

45° SCH40 BEND PE / 45° SCH40 COUDE BU

ISSUE DATE: DATE D'EMISSION:	2007 04 20
SUPERSEDES: REMPLACE:	2006 05 02

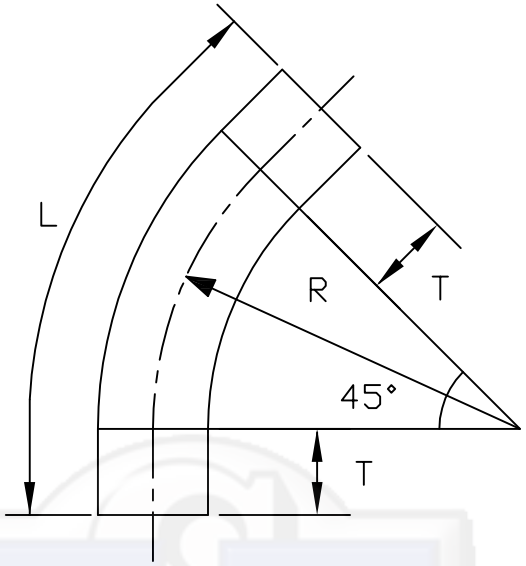

	CODE	Size Grosseur	L Ref.	R Ref.	T Ref.
KRALOY	# 068606 # 076721 # 078558	63mm (2.5")	360mm (14.188")	267mm (10.50")	76mm (3.0")
KRALOY	# 068607 # 076722 # 078559	78mm (3.0")	438mm (17.25")	330mm (13.0")	89mm (3.50")
KRALOY	# 068608 * 069209 # 076723 # 078560	91mm (3.5")	464mm (18.25")	381mm (15.0")	89mm (3.50")
KRALOY	# 068609 # 076724 # 078561	103mm (4.0")	505mm (19.875")	406mm (16.0")	89mm (3.50")
KRALOY	# 068611 # 076725 # 078562	129mm (5.0")	1016mm (40.0")	610mm (24.0")	267mm (10.50")
KRALOY	# 068612 # 076726 # 078563	155mm (6.0")	1016mm (40.0")	762mm (30.0")	210mm (8.25")

#– UL APPROVED / APPROUVES
*– CSA CERTIFIED / CERTIFIE
L– LENGTH OF PIPE BEFORE BENDING / LONGUEUR DU TUYAU AVANT D'ETRE COURBE