ELLIOTT ELECTRIC SUPPLY
We Deliver...Lower Cost, Quality Products, & Personal Service
201 South Persimmon Street
Tomball, TX 77375-6855
Phone: 2813575300
Fax: 2813575005



078628 4" SCH80 90D PVC ELBOW

MULTIFITTINGS/KRALOY

Catalog Number	078628
Manufacturer	MULTIFITTINGS/KRALOY
Description	80STD4090 4"x90D PVC STD ELBOW SPxSP SCH80 KRALOY
Weight per unit	8.1 (lbs/each)
Product Category	Boxes & Covers

Features

Material	PVC
Connection	SPxSP

Descriptions

Description	4" SCH80 90D PVC ELBOW
Features	PRODUCT LINE: Kraloy Rigid PVC Fittings includes adapters, couplings, elbows, access fittings, boxes, cover plates, expansion fittings and conduit spacers - virtually any fitting required to complete the PVC conduit system. Easy installations, the ability to perform in demanding environments and labor savings are the reasons nonmetallic conduit fittings are increasingly the fitting of choice. FEATURES: Lightweight yet offers high impact and tensile strength;Chemical resistant to a wide range of acids, al
Long Description	80STD4090 4"x90D PVC STD ELBOW SPxSP SCH80 KRALOY
Product Type	4"X90D PVC STD Elbow SPXSP SCH80 Kraloy
Extra Long Description	MFIT 078628 4"x90D PVC STD ELBOW SP

Manufacturer Information

Brand	Multi Fittings Corp
	Kraloy
GTIN	00622454786288
Manufacturers Part Number	078628
UPC	888636

Taxonomies, Classifications, and Categories

Category Description	PVC ELBOWS
Type	STD ELBOW

Trade Size

Trade Size	4 INCH

Packaging

Carton	1
Package	54
Weight Per Each	8.1 (lbs/each)

Uses, Certifications, and Standards

Standard	UL 651

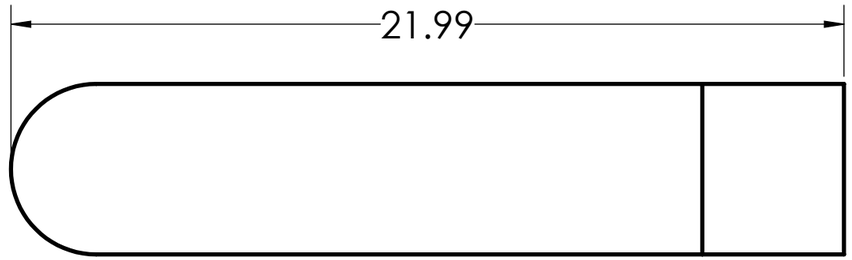

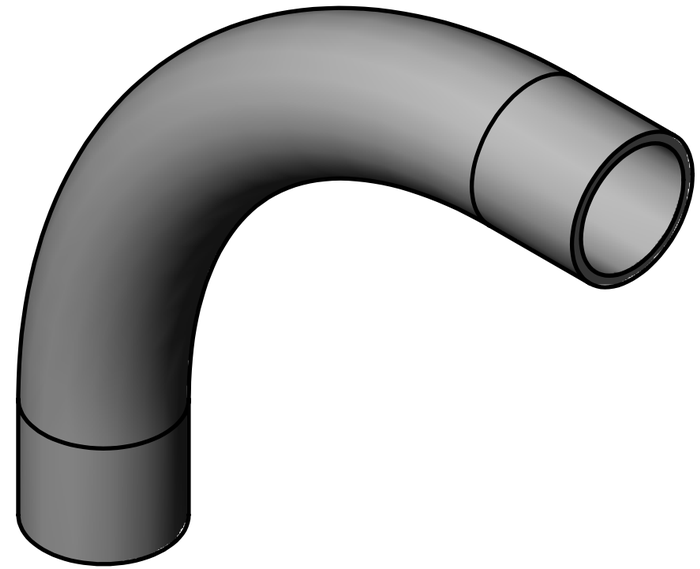

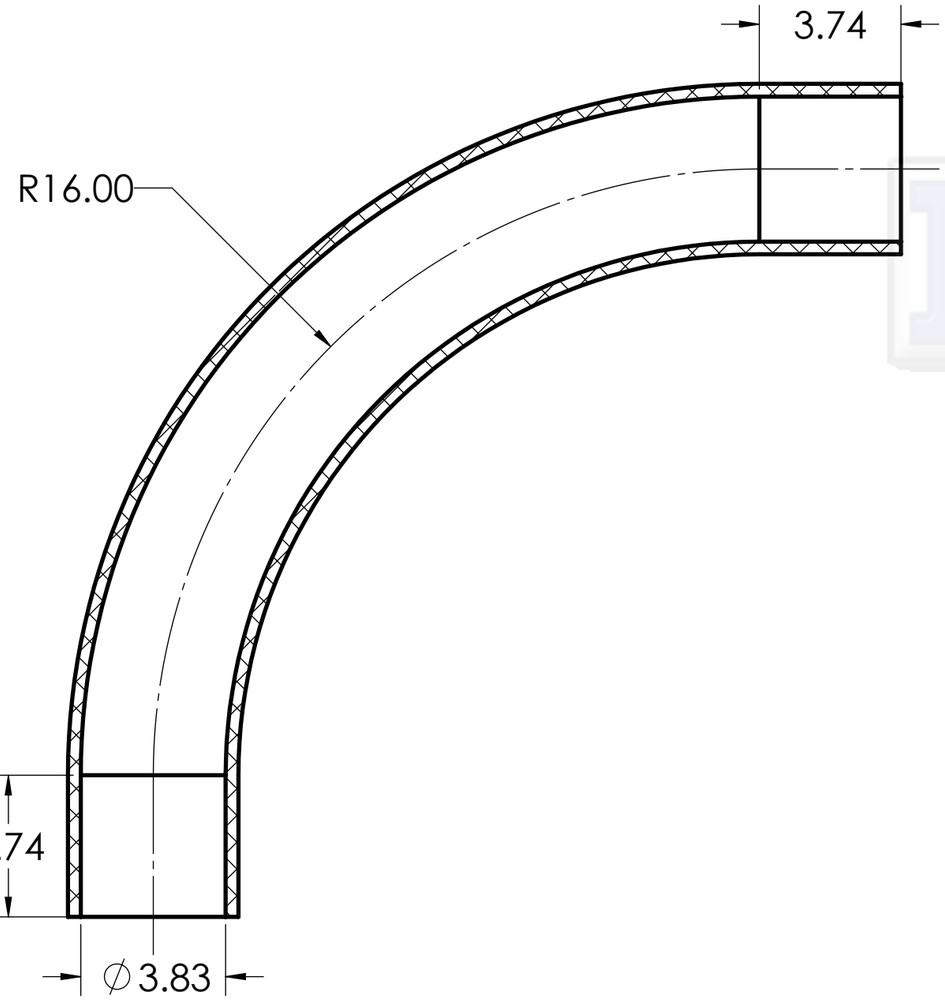

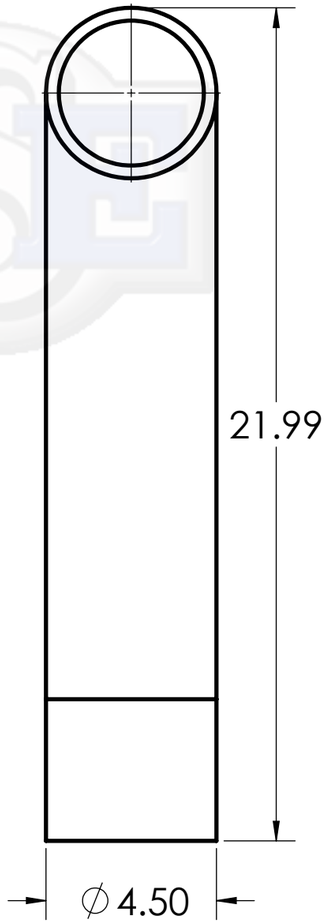

THIS ITEM IS FABRICATED AND AS SUCH MAY HAVE VARYING DIMENSIONS DUE TO DIFFERENT MANUFACTURING PROCESSES

DIMENSIONS SHOWN ARE FOR REFERENCE AND ARE SUBJECT TO CHANGE WITHOUT NOTICE

IPEX Technologies Inc.

PART DESCRIPTION

80STD4090 4"x90D PVC STD ELBOW SPxSP SCH80 KRALOY

PRODUCT CODE:	*UNIT: INCHES UNLESS DUAL DIMENSION: INCH [METRIC]*	*SCALE:*
078628		NTS

DRAWN: A.R.