Atlanta, Georgia
Phone 800-521-7326 Fax 770-745-1333

Fender Washer Zinc

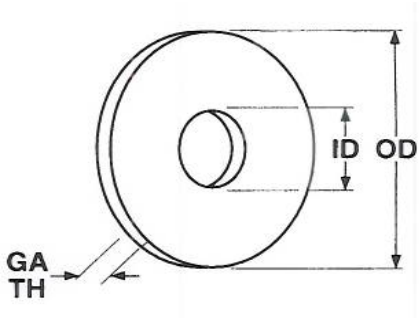

Peco Catalog#	Bolt Size	Inside Diameter +/- 0.010	Outside Diameter +/- 0.010	Minimum Thickness	Maximum Thickness	Appoximate Quantity in 50 Lbs.
316X1FWZJ	10	7/32	1	0.0510	0.0800	3500
316X114FWZJ	10	7/32	1-1/4	0.0510	0.0800	3000
14X1FWZJ	1/4	9/32	1	0.0510	0.0800	3750
14X114FWZJ	1/4	9/32	1-1/4	0.0510	0.0800	2300
14X112FWZJ	1/4	9/32	1-1/2	0.0510	0.0800	1550
14X2FWZJ	1/4	9/32	2	0.0510	0.0800	810
516X114FWZJ	5/16	11/32	1-1/4	0.0510	0.0800	2400
516X112FWZJ	5/16	11/32	1-1/2	0.0510	0.0800	1600
38X114FWZJ	3/8	13/32	1-1/4	0.0510	0.0800	2350
38X112FWZJ	3/8	13/32	1-1/2	0.0510	0.0800	1650
38X2FWZJ	3/8	13/32	2	0.0510	0.0800	1000
12X112FWZJ	1/2	17/32	1-1/2	0.0510	0.0800	2000
12X2FWZJ	1/2	17/32	2	0.0510	0.0800	950

Peco Fasteners specification sheets are a reference guide to help in the selection of fasteners. Peco has made every effort to ensure the accuracy of the information. However, Peco Fasteners is not responsible for any errors that may be contained within these sheets. Peco Fasteners makes no claim of warranty in the accuracy of this information. Users of this information are solely responsible for protecting themselves against liability. It is solely the responsibility of the purchasers and users of these fasteners to consult with Engineers that are experts in an applicable field. Peco Fasteners is not responsible for any loss, claim, or damage due to these specification sheets.

5/29/15

Atlanta, Georgia
Phone 800-521-7326 Fax 770-745-1333

Fender Washer Zinc

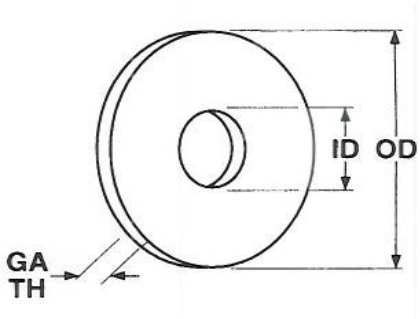

Peco Catalog#	Bolt Size	Inside Diameter +/- 0.010	Outside Diameter +/- 0.010	Minimum Thickness	Maximum Thickness	Appoximate Quantity in 50 Lbs.
316X1FWZJ	10	7/32	1	0.0510	0.0800	3500
316X114FWZJ	10	7/32	1-1/4	0.0510	0.0800	3000
14X1FWZJ	1/4	9/32	1	0.0510	0.0800	3750
14X114FWZJ	1/4	9/32	1-1/4	0.0510	0.0800	2300
14X112FWZJ	1/4	9/32	1-1/2	0.0510	0.0800	1550
14X2FWZJ	1/4	9/32	2	0.0510	0.0800	810
516X114FWZJ	5/16	11/32	1-1/4	0.0510	0.0800	2400
516X112FWZJ	5/16	11/32	1-1/2	0.0510	0.0800	1600
38X114FWZJ	3/8	13/32	1-1/4	0.0510	0.0800	2350
38X112FWZJ	3/8	13/32	1-1/2	0.0510	0.0800	1650
38X2FWZJ	3/8	13/32	2	0.0510	0.0800	1000
12X112FWZJ	1/2	17/32	1-1/2	0.0510	0.0800	2000
12X2FWZJ	1/2	17/32	2	0.0510	0.0800	950

Peco Fasteners specification sheets are a reference guide to help in the selection of fasteners. Peco has made every effort to ensure the accuracy of the information. However, Peco Fasteners is not responsible for any errors that may be contained within these sheets. Peco Fasteners makes no claim of warranty in the accuracy of this information. Users of this information are solely responsible for protecting themselves against liability. It is solely the responsibility of the purchasers and users of these fasteners to consult with Engineers that are experts in an applicable field. Peco Fasteners is not responsible for any loss, claim, or damage due to these specification sheets.

5/29/15