ELLIOTT ELECTRIC SUPPLY
We Deliver...Lower Cost, Quality Products, & Personal Service
1315 2nd Street MAIP
Pryor, OK 74361-0000
Phone: 9188030063
Fax: 9188030064



4ELL90 4" SCH40 90D PVC ELBOW PLAIN END

CANTEX,INC

Catalog Number	4ELL90
Manufacturer	CANTEX,INC
Description	CANTEX 5133832 is a 4 in. x 90-Degree Plain End Schedule 40 Standard Radius Elbow used to change the direction of a conduit run by 90-Degree
Weight per unit	1.7 (lbs/each)
Product Category	PVC Sch 40 Elbows

Dimensions and Weight

Size	4 in. x 90-Degree Plain End Schedule 40 Standard Radius Elbow

Descriptions

Also Known As...	Sweep
	Elbow Pre-Fab
Description	4" SCH40 90D PVC ELBOW
Features	CANTEX 5133832 is a 4 in. x 90-Degree Plain End Schedule 40 Standard Radius Elbow used to change the direction of a conduit run by 90-Degree
Long Description	CANTEX 5133832 is a 4 in. x 90-Degree Plain End Schedule 40 Standard Radius Elbow used to change the direction of a conduit run by 90-Degree
Product Type	4 UL40 90 BND STD R
Extra Long Description	CTX 5133832 4 UL40 90 BND STD R

Manufacturer Information

Brand	PVC & Accessories
	CANTEX INC.
GTIN	00088700518841
Manufacturers Part Number	5133832
UPC	881780

Taxonomies, Classifications, and Categories

Category Description	PVC ELBOWS
Type	4 in. x 90-Degree Plain End Schedule 40 Standard Radius Elbow

Trade Size

Trade Size	4

Packaging

Carton	1
Package	10
Weight Per Each	1.7 (lbs/each)

Schedule 40 Standard Radius Elbows - Plain End

CANTEX

Schedule 40 90° Elbow - Plain End

Part Number	Trade Size	Carton Qty	"R"	"O"	"H'	"S" MIN	"L"
5133823	1/2	50	4.000	4.000	4.000	1.500	6.250
5133824	3/4	35	4.500	4.500	4.500	1.500	7.125
5133825	1	20	5.750	5.750	5.750	1.875	9.000
5133826	1-1/4	30	7.250	7.250	7.250	2.000	11.375
5133827	1-1/2	30	8.250	8.250	8.250	2.000	13.000
5133828	2	15	9.500	9.500	9.500	2.000	15.000
5133829	2-1/2	18	10.500	10.500	10.500	3.000	16.500
5133830	3	14	13.000	13.000	13.000	3.125	20.375
5133831	3-1/2	12	15.000	15.000	15.000	3.250	23.500
5133832	4	10	16.000	16.000	16.000	3.375	25.125
5133835	5	30*	24.000	24.000	24.000	3.625	37.625
5133834	6	25*	30.000	30.000	30.000	3.750	47.125

* Pallet Quantity

Dimensions are nominal

Conforms to UL651 and NEMA TC3
Material is Rigid PVC
Bend Tolerance is ±2°

CANTEX 90-Degree Plain End Schedule 40 Standard Radius Elbows are used to change the direction of a conduit run by 90 degrees.



- Schedule 40 PVC construction for strength and durability
- For indoor or outdoor use
- Suitable for aboveground or buried
- Plain end connections are solvent weld
- ETL Listed
- Made in USA

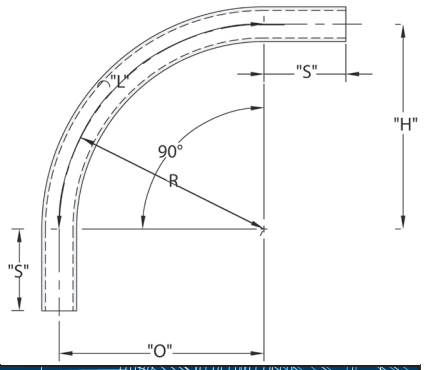

Schedule 40 45° Elbow - Plain End

Part Number	Trade Size	Carton Qty.	"R"	"O"	"H'	"S" MIN	"L"
5133763	1/2	50	4.000	1.188	2.875	1.500	3.125
5133764	3/4	25	4.500	1.313	3.188	1.500	3.500
5133765	1	20	5.750	1.688	4.000	1.875	4.500
5133766	1-1/4	25	7.250	2.125	5.125	2.000	5.688
5133767	1-1/2	20	8.250	2.375	5.875	2.000	6.500
5133768	2	10	9.500	2.813	6.750	2.000	7.500
5133769	2-1/2	20	10.500	2.563	7.375	3.000	8.250
5133770	3	8	13.000	3.813	9.188	3.125	10.250
5133771	3-1/2	5	15.000	4.375	10.625	3.250	11.875
5133772	4	20	16.000	4.688	11.438	3.375	12.625
5133773	5	30*	24.00	7.000	17.000	3.625	18.875
5133774	6	25*	30.000	8.813	21.250	3.750	22.875

* Pallet Quantity

Dimensions are nominal

Conforms to UL651 and NEMA TC3
Material is Rigid PVC
Bend Tolerance is ±2°

CANTEX 45-Degree Plain End Schedule 40 Standard Radius Elbows are used to change the direction of a conduit run by 45 degrees.



- Schedule 40 PVC construction for strength and durability
- For indoor or outdoor use
- Suitable for aboveground or buried
- Plain end connections are solvent weld
- ETL Listed
- Made in USA

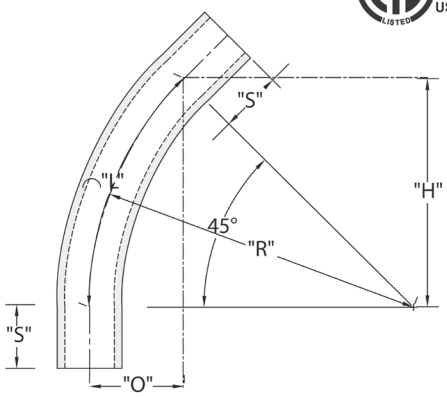

Schedule 40 Standard Radius Elbows - Plain End

CANTEX

Schedule 40 30° Elbow - Plain End



CANTEX 30-Degree Plain End Schedule 40 Standard Radius Elbows are used to change the direction of a conduit run by 30 degrees.

- Schedule 40 PVC construction for strength and durability
- For indoor or outdoor use
- Suitable for aboveground or buried
- Plain end connections are solvent weld
- ETL Listed
- Made in USA

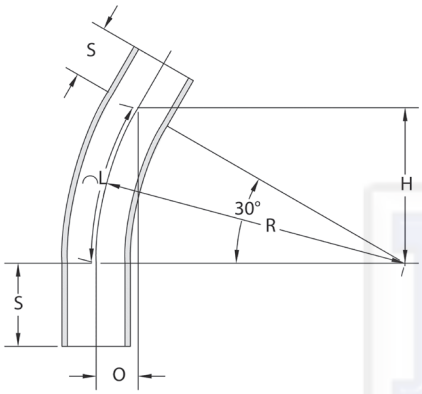

Part Number	Trade Size	Carton Qty.	"R"	"O"	"H'	"S" MIN	"L"
5133755	1/2	50	4.000	.500	2.000	1.500	2.125
5133744	3/4	25	4.500	.625	2.250	1.500	2.375
5133745	1	20	5.750	.750	2.875	1.875	3.000
5133746	1-1/4	25	7.250	1.000	3.625	2.000	3.813
5133747	1-1/2	20	8.250	1.063	4.125	2.000	4.313
5133748	2	10	9.500	1.250	4.750	2.000	5.000
5133749	2-1/2	20	10.500	1.438	5.250	3.000	5.500
5133750	3	8	13.000	1.750	6.500	3.125	6.813
5133751	3-1/2	5	15.000	2.000	7.563	3.250	7.875
5133775	4	20	16.000	2.063	8.000	3.375	8.375
5133753	5	30*	24.000	3.188	12.000	3.625	12.563
5133754	6	25*	30.000	4.000	15.000	3.750	15.688

* Pallet Quantity

Dimensions are nominal

Conforms to UL651 and NEMA TC3
Material is Rigid PVC
Bend Tolerance is ±2°

Schedule 40 22-1/2° Elbow - Plain End



CANTEX 22-1/2-Degree Plain End Schedule 40 Standard Radius Elbows are used to change the direction of a conduit run by 22-1/2 degrees.

- Schedule 40 PVC construction for strength and durability
- For indoor or outdoor use
- Suitable for aboveground or buried
- Plain end connections are solvent weld
- ETL Listed
- Made in USA

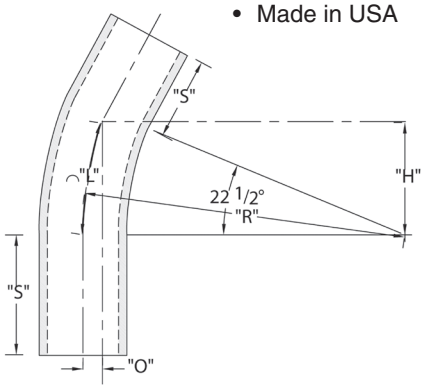

Part Number	Trade Size	Carton Qty.	"R"	"O"	"H'	"S" MIN	"L"
5136403	1-1/4	25	7.250	.563	2.750	2.000	2.875
5134094	1-1/2	25	8.250	.625	3.125	2.000	3.250
5134067	2	10	9.500	.750	3.625	2.000	3.750
5134096	2-1/2	20	10.500	.813	4.000	3.000	4.125
5134068	3	8	13.000	1.000	5.000	3.125	5.125
5134095	3-1/2	5	15.000	1.125	5.750	3.250	5.875
5133757	4	20	16.000	1.250	6.125	3.375	6.250
5134037	5	60*	24.000	1.813	9.188	3.625	9.375
5133901	6	50*	30.000	2.250	11.500	3.750	11.750

* Pallet Quantity

Dimensions are nominal

Conforms to UL651 and NEMA TC3
Material is Rigid PVC
Bend Tolerance is ±2°