ELLIOTT ELECTRIC SUPPLY
We Deliver...Lower Cost, Quality Products, & Personal Service
2310 N. Stallings Dr.
Nacogdoches, TX 75964-0
Phone: 9365697941
Fax: 9365604685

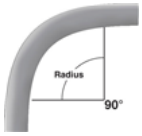

4ELL9024 4" SCH40 90D 24R PVC ELBOW

CANTEX,INC

Catalog Number	4ELL9024
Manufacturer	CANTEX,INC
Description	4IN UL40 SPECIAL RADIUS ELBOW 90DEG X 24IN RADIUS
Weight per unit	8.9 (lbs/each)
Product Category	PVC Sch 40 Elbows

Features

Inside Diameter	3.961 in.
Material	PVC
Wall Thickness	.237"
Outside Diameter	51894

Material, Color, and Finish

Color	Gray 0

Descriptions

Description	4" SCH40 90D 24R PVC ELBOW
Long Description	4IN UL40 SPECIAL RADIUS ELBOW 90DEG X 24IN RADIUS
Product Type	4 UL40 90 BND 24"R
Special Features	Plain End

Manufacturer Information

Brand	PVC & Accessories
	CANTEX
	CANTEX INC.
GTIN	00088700014527
Manufacturers Part Number	5133822
UPC	881780

Taxonomies, Classifications, and Categories

Category Description	PVC ELBOWS
Type	Sch40 90Deg Elbow

Trade Size

Trade Size	798

Packaging

Carton	1
Weight Per Each	8.9 (lbs/each)

Uses, Certifications, and Standards

Application	90° change in direction of a conduit run
Standard	Conforms to UL651 and NEMA TC3

CANTEX INC.
301 COMMERCE STE. 2700
FORT WORTH, TEXAS 76102
817-215-7000 FAX: 817-215-7001
www.cantexinc.com

Schedule 40 90° Elbow Special Radius - Plain End

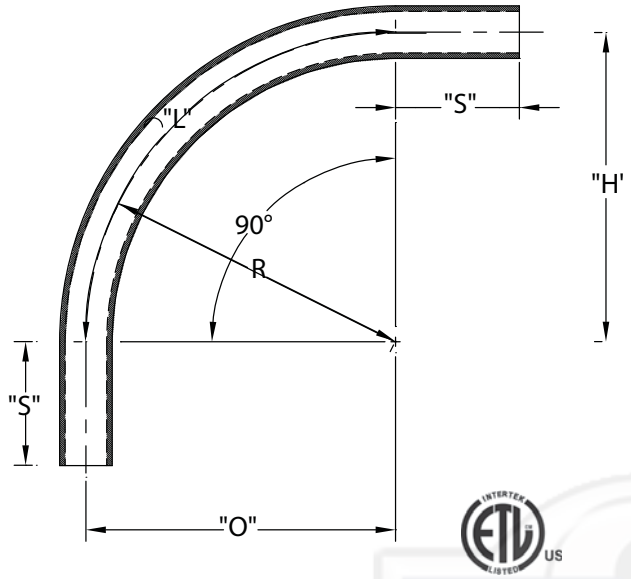

Schedule 40 90° Elbow 18" Radius Plain End

Part Number	Trade Size	"R"	"O"	"H'	"S" MIN	"L"
5133846	1	18	18	18	1.875	28.250
5133923	1-1/4	18	18	18	2.000	28.250
5133839	1-1/2	18	18	18	2.000	28.250
5133844	2	18	18	18	2.000	28.250
5133856	2-1/2	18	18	18	3.000	28.250
5133858	3	18	18	18	3.125	28.250

Dimensions are nominal

Schedule 40 90° Elbow 24" Radius Plain End

Part Number	Trade Size	"R"	"O"	"H'	"S" MIN	"L"
5133934	3/4	24	24	24	1.500	37.750
5133859	1	24	24	24	1.875	37.750
5133883	1-1/4	24	24	24	2.000	37.750
5133873	1-1/2	24	24	24	2.000	37.750
5133836	2	24	24	24	2.000	37.750
5133847	2-1/2	24	24	24	3.000	37.750
5133837	3	24	24	24	3.125	37.750
5133893	3-1/2	24	24	24	3.250	37.750
5133822	4	24	24	24	3.375	37.750

Dimensions are nominal

Schedule 40 90° Elbow 30" Radius Plain End

Part Number	Trade Size	"R"	"O"	"H'	"S" MIN	"L"
5134147	3/4	30	30	30	1.500	47.125
5136340	1	30	30	30	1.875	47.125
5133878	1-1/4	30	30	30	2.000	47.125
5133921	1-1/2	30	30	30	2.000	47.125
5133920	2	30	30	30	2.000	47.125
5133981	2-1/2	30	30	30	3.000	47.125
5133867	3	30	30	30	3.125	47.125
5133948	3-1/2	30	30	30	3.250	47.125
5133850	4	30	30	30	3.375	47.125
5133872	5	30	30	30	3.625	47.125

Dimensions are nominal

Schedule 40 90° Elbow 36" Radius Plain End

Part Number	Trade Size	"R"	"O"	"H'	"S" MIN	"L"
5133949	3/4	36	36	36	1.500	56.500
5133852	1	36	36	36	1.875	56.500
5133884	1-1/4	36	36	36	2.000	56.500
5133866	1-1/2	36	36	36	2.000	56.500
5133848	2	36	36	36	2.000	56.500
5133857	2-1/2	36	36	36	3.000	56.500
5133820	3	36	36	36	3.125	56.500
5133818	3-1/2	36	36	36	3.250	56.500
5133821	4	36	36	36	3.375	56.500
5133841	5	36	36	36	3.625	56.500
5133877	6	36	36	36	3.750	56.500

Dimensions are nominal

Schedule 40 90° Elbow 48" Radius Plain End

Part Number	Trade Size	"R"	"O"	"H'	"S" MIN	"L"
5133864	1	48	48	48	1.875	75.375
5133871	1-1/4	48	48	48	2.000	75.375
5133865	1-1/2	48	48	48	2.000	75.375
5133876	2	48	48	48	2.000	75.375
5133849	2-1/2	48	48	48	3.000	75.375
5133817	3	48	48	48	3.125	75.375
5133892	3-1/2	48	48	48	3.250	75.375
5133843	4	48	48	48	3.375	75.375
5133842	5	48	48	48	3.625	75.375
5133816	6	48	48	48	3.750	75.375
5133993D	8	48	48	48	6.625	75.375

Dimensions are nominal

Schedule 40 90° Elbow Special Radius - Plain End

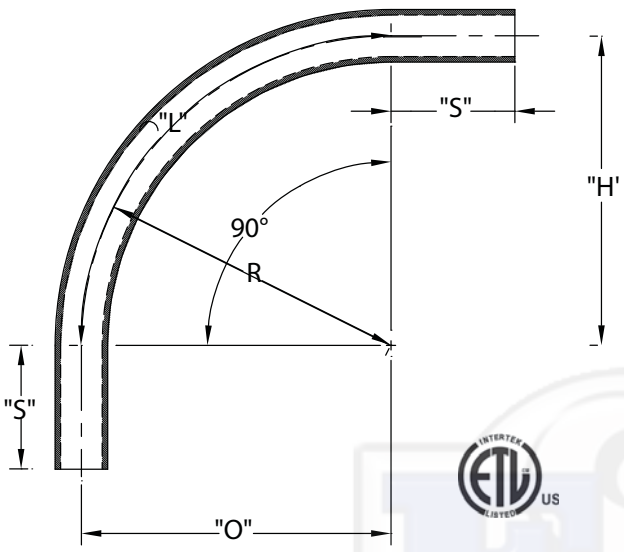

Schedule 40 90° Elbow 60" Radius Plain End

Part Number	Trade Size	"R"	"O"	"H'	"S" MIN	"L"
5133786	2	60	60	60	2.000	94.250
5134046	2-1/2	60	60	60	3.000	94.250
5133819	3	60	60	60	3.125	94.250
5133925	3-1/2	60	60	60	3.250	94.250
5133854	4	60	60	60	3.375	94.250
5133885	5	60	60	60	3.625	94.250
5133886	6	60	60	60	3.750	94.250

Dimensions are nominal

Schedule 40 90° Elbow 72" Radius Plain End

Part Number	Trade Size	"R"	"O"	"H'	"S" MIN	"L"
5133860	2	72	72	72	2.000	113.125
5134155	3	72	72	72	3.125	113.125
5133787	4	72	72	72	3.375	113.125
5134024	5	72	72	72	3.625	113.125
5133928	6	72	72	72	3.750	113.125

Dimensions are nominal

Schedule 40 90° Elbow 84" Radius Plain End

Part Number	Trade Size	"R"	"O"	"H'	"S" MIN	"L"
5134049	6	84	84	84	3.75	132

Dimensions are nominal

Schedule 40 90° Elbow 96" Radius Plain End

Part Number	Trade Size	"R"	"O"	"H'	"S" MIN	"L"
5134025	5	96	96	96	3.625	150.875
5134015	6	96	96	96	3.750	150.875

Dimensions are nominal

Schedule 40 90° Elbow 120" Radius Plain End

Part Number	Trade Size	"R"	"O"	"H'	"S" MIN	"L"
5133927	4	120	120	120	3.375	188.500
5134007	6	120	120	120	3.750	188.500

Dimensions are nominal

Schedule 40 90° Elbow 150" Radius Plain End

Part Number	Trade Size	"R"	"O"	"H'	"S" MIN	"L"
5133992	4	150	150	150	3.375	235.625
5134059	5	150	150	150	3.625	235.625

Dimensions are nominal