ELLIOTT ELECTRIC SUPPLY
We Deliver...Lower Cost, Quality Products, & Personal Service
2310 N. Stallings Dr.
Nacogdoches, TX 75964-0
Phone: 9365697941
Fax: 9365604685

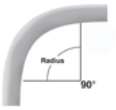

4ELL9048 4" SCH40 90D 48"R PVC ELBOW

CANTEX,INC

Catalog Number	4ELL9048
Manufacturer	CANTEX,INC
Description	CANTEX 5133843 is a 4 in. x 90-Degree x 48 in. Radius Plain End Schedule 40 Special Radius Elbow used to change the direction of a conduit run by 90-Degree
Weight per unit	4.1 (lbs/each)
Product Category	PVC Sch 40 Elbows

Dimensions and Weight

Size	4 in. x 90-Degree x 48 in. Radius Plain End Schedule 40 Special Radius Elbow

Descriptions

Description	4" SCH40 90D 48"R PVC ELBOW
Features	CANTEX 5133843 is a 4 in. x 90-Degree x 48 in. Radius Plain End Schedule 40 Special Radius Elbow used to change the direction of a conduit run by 90-Degree
Long Description	CANTEX 5133843 is a 4 in. x 90-Degree x 48 in. Radius Plain End Schedule 40 Special Radius Elbow used to change the direction of a conduit run by 90-Degree
Product Type	4 UL40 90 BND 48"R
Extra Long Description	CTX 5133843 4 UL40 90 BND 48"R

Manufacturer Information

Brand	PVC & Accessories
	CANTEX INC.
GTIN	00088700014602
Manufacturers Part Number	5133843
UPC	881780

Taxonomies, Classifications, and Categories

Category Description	PVC ELBOWS
Type	4 in. x 90-Degree x 48 in. Radius Plain End Schedule 40 Special Radius Elbow

Trade Size

Trade Size	4

Packaging

Carton	1
Weight Per Each	4.1 (lbs/each)

Schedule 40 Special Radius Elbows - Plain End

Additional sizes are available as non-stock items. Call for specifications and quotes.

Schedule 40 90° Elbow Special Radius - Plain End

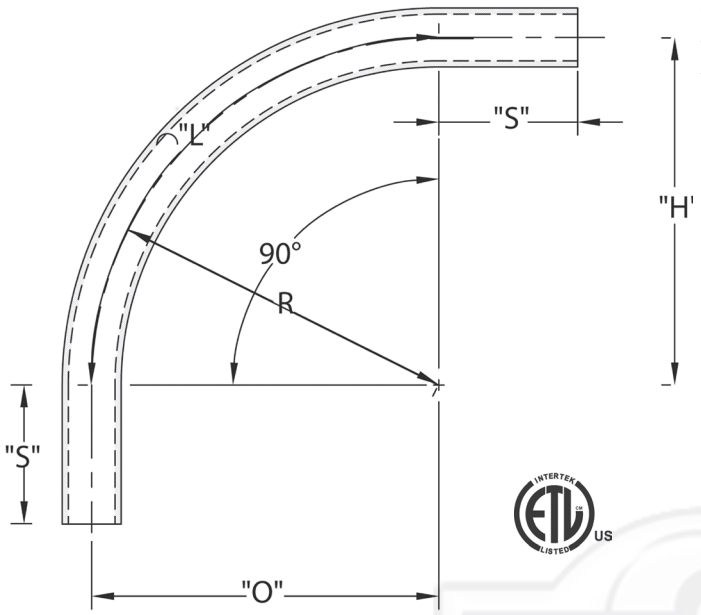

CANTEX Special Radius Plain End Schedule 40 90-Degree Elbows are used to change the direction of a conduit run by 90 degrees when special radiuses are needed.

- Schedule 40 PVC construction for strength and durability
- For indoor or outdoor use
- Suitable for aboveground or buried
- Plain end connections are solvent weld
- ETL Listed
- Made in USA

Schedule 40 90° Elbow 18" Radius Plain End

Part Number	Trade Size	"R"	"O"	"H'	"S" MIN	"L"
5133846	1	18	18	18	1.875	28.250
5133923	1-1/4	18	18	18	2.000	28.250
5133839	1-1/2	18	18	18	2.000	28.250
5133844	2	18	18	18	2.000	28.250
5133856	2-1/2	18	18	18	3.000	28.250
5133858	3	18	18	18	3.125	28.250

Dimensions are nominal

Schedule 40 90° Elbow 30" Radius Plain End

Part Number	Trade Size	"R"	"O"	"H'	"S" MIN	"L"
5134147	3/4	30	30	30	1.500	47.125
5136340	1	30	30	30	1.875	47.125
5133878	1-1/4	30	30	30	2.000	47.125
5133921	1-1/2	30	30	30	2.000	47.125
5133920	2	30	30	30	2.000	47.125
5133981	2-1/2	30	30	30	3.000	47.125
5133867	3	30	30	30	3.125	47.125
5133948	3-1/2	30	30	30	3.250	47.125
5133850	4	30	30	30	3.375	47.125
5133872	5	30	30	30	3.625	47.125

Dimensions are nominal

Schedule 40 90° Elbow 24" Radius Plain End

Part Number	Trade Size	"R"	"O"	"H'	"S" MIN	"L"
5133934	3/4	24	24	24	1.500	37.750
5133859	1	24	24	24	1.875	37.750
5133883	1-1/4	24	24	24	2.000	37.750
5133873	1-1/2	24	24	24	2.000	37.750
5133836	2	24	24	24	2.000	37.750
5133847	2-1/2	24	24	24	3.000	37.750
5133837	3	24	24	24	3.125	37.750
5133893	3-1/2	24	24	24	3.250	37.750
5133822	4	24	24	24	3.375	37.750

Dimensions are nominal

Schedule 40 90° Elbow 36" Radius Plain End

Part Number	Trade Size	"R"	"O"	"H'	"S" MIN	"L"
5133949	3/4	36	36	36	1.500	56.500
5133852	1	36	36	36	1.875	56.500
5133884	1-1/4	36	36	36	2.000	56.500
5133866	1-1/2	36	36	36	2.000	56.500
5133848	2	36	36	36	2.000	56.500
5133857	2-1/2	36	36	36	3.000	56.500
5133820	3	36	36	36	3.125	56.500
5133818	3-1/2	36	36	36	3.250	56.500
5133821	4	36	36	36	3.375	56.500
5133841	5	36	36	36	3.625	56.500
5133877	6	36	36	36	3.750	56.500

Dimensions are nominal

Schedule 40 Special Radius Elbows - Plain End

Additional sizes are available as non-stock items. Call for specifications and quotes.

Schedule 40 90° Elbow Special Radius - Plain End

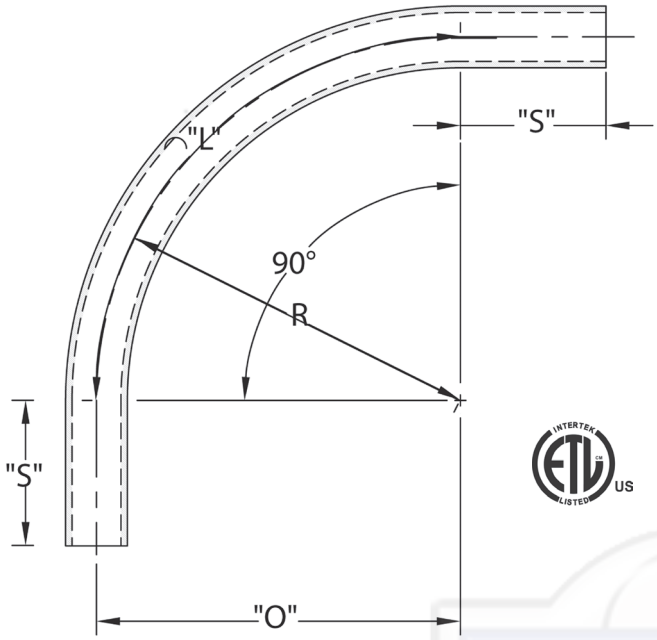

CANTEX Special Radius Plain End Schedule 40 90-Degree Special Radius Elbows are used to change the direction of a conduit run by 90 degrees when special radiuses are needed.

"H"

- Schedule 40 PVC construction for strength and durability
- For indoor or outdoor use
- Suitable for aboveground or buried
- Plain end connections are solvent weld
- ETL Listed Conforms to UL651 and NEMA TC3
- Made in USA

Schedule 40 90° Elbow 48" Radius Plain End

Part Number	Trade Size	"R"	"O"	"H'	"S" MIN	"L"
5133864	1	48	48	48	1.875	75.375
5133871	1-1/4	48	48	48	2.000	75.375
5133865	1-1/2	48	48	48	2.000	75.375
5133876	2	48	48	48	2.000	75.375
5133849	2-1/2	48	48	48	3.000	75.375
5133817	3	48	48	48	3.125	75.375
5133892	3-1/2	48	48	48	3.250	75.375
5133843	4	48	48	48	3.375	75.375
5133842	5	48	48	48	3.625	75.375
5133816	6	48	48	48	3.750	75.375
5133993D*	8	48	48	48	6.625	75.375

*Not ETL listed

Dimensions are nominal

Schedule 40 90° Elbow 60" Radius Plain End

Part Number	Trade Size	"R"	"O"	"H'	"S" MIN	"L"
5133786	2	60	60	60	2.000	94.250
5134046	2-1/2	60	60	60	3.000	94.250
5133819	3	60	60	60	3.125	94.250
5133925	3-1/2	60	60	60	3.250	94.250
5133854	4	60	60	60	3.375	94.250
5133885	5	60	60	60	3.625	94.250
5133886	6	60	60	60	3.750	94.250

Dimensions are nominal

If you don't see the size you need, additional sizes of special radius elbows are available as non-stocked items. Call for specifications and quotes.

Schedule 40 Special Radius Elbows - Plain End

Additional sizes are available as non-stock items. Call for specifications and quotes.

Schedule 40 45° Elbow Special Radius - Plain End

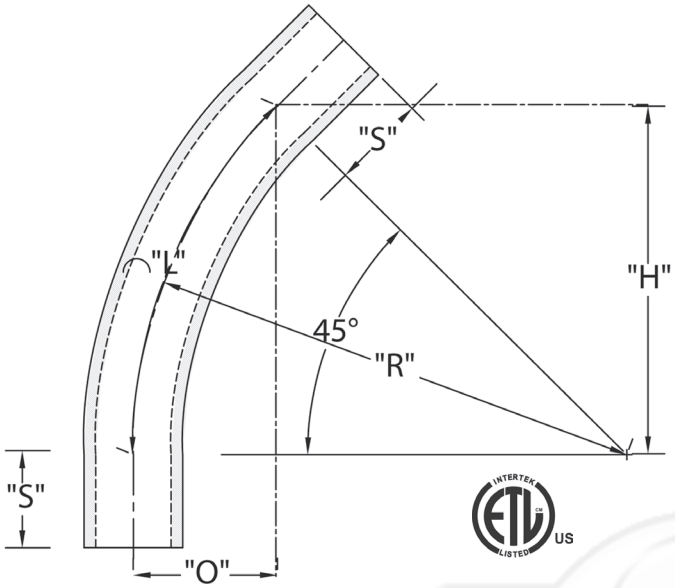

CANTEX 45-Degree Plain End Schedule 40 Special Radius Elbows are used to change the direction of a conduit run by 45 degrees when special radiuses are needed.

- Schedule 40 PVC construction for strength and durability
- For indoor or outdoor use
- Suitable for aboveground or buried
- Plain end connections are solvent weld
- ETL Listed Conforms to UL651 and NEMA TC3
- Made in USA

Schedule 40 45° Elbow 18" Radius Plain End

Part Number	Trade Size	"R"	"O"	"H'	"S" MIN	"L"
5134008	1	18.000	5.250	12.75	1.875	14.125
5136344	1-1/4	18.000	5.250	12.75	2.000	14.125
5133840	1-1/2	18.000	5.250	12.75	2.000	14.125
5133797	2	18.000	5.250	12.75	2.000	14.125
5133973	2-1/2	18.000	5.250	12.75	3.000	14.125
5133799	3	18.000	5.250	12.75	3.125	14.125

Dimensions are nominal

Schedule 40 45° Elbow 30" Radius Plain End

Part Number	Trade Size	"R"	"O"	"H'	"S" MIN	"L"
5136341	1	30.000	8.688	21.250	1.875	23.56
5136348	1-1/2	30.000	8.688	21.250	2.000	23.56
5133918	2	30.000	8.688	21.250	2.000	23.56
5133896	2-1/2	30.000	8.688	21.250	3.000	23.56
5133897	3	30.000	8.688	21.250	3.125	23.56
5133953	4	30.000	8.688	21.250	3.375	23.56
5133954	5	30.000	8.688	21.250	3.625	23.56

Dimensions are nominal

Schedule 40 45° Elbow 24" Radius Plain End

Part Number	Trade Size	"R"	"O"	"H'	"S" MIN	"L"
5133933	3/4	24.000	17.000	7.000	1.500	18.875
5133875	1	24.000	17.000	7.000	1.875	18.875
5133941	1-1/4	24.000	17.000	7.000	2.000	18.875
5133874	1-1/2	24.000	17.000	7.000	2.000	18.875
5133815	2	24.000	17.000	7.000	2.000	18.875
5133935	2-1/2	24.000	17.000	7.000	3.000	18.875
5133800	3	24.000	17.000	7.000	3.125	18.875
5133802	3-1/2	24.000	17.000	7.000	3.250	18.875
5133812	4	24.000	17.000	7.000	3.375	18.875

Dimensions are nominal

Schedule 40 45° Elbow 36" Radius Plain End

Part Number	Trade Size	"R"	"O"	"H'	"S" MIN	"L"
5133950	3/4	36.000	10.500	25.500	1.500	28.250
5133919	1	36.000	10.500	25.500	1.875	28.250
5133956	1-1/4	36.000	10.500	25.500	2.000	28.250
5133810	1-1/2	36.000	10.500	25.500	2.000	28.250
5133778	2	36.000	10.500	25.500	2.000	28.250
5133801	2-1/2	36.000	10.500	25.500	3.000	28.250
5133779	3	36.000	10.500	25.500	3.125	28.250
5133939	3-1/2	36.000	10.500	25.500	3.250	28.250
5133777	4	36.000	10.500	25.500	3.375	28.250
5133780	5	36.000	10.500	25.500	3.625	28.250
5133880	6	36.000	10.500	25.500	3.750	28.250
5133988D	8*	36.000	10.500	25.500	6.625	28.250

*Not ETL Listed

Dimensions are nominal

Schedule 40 Special Radius Elbows - Plain End

Additional sizes are available as non-stock items. Call for specifications and quotes.

Schedule 40 45° Elbow Special Radius - Plain End

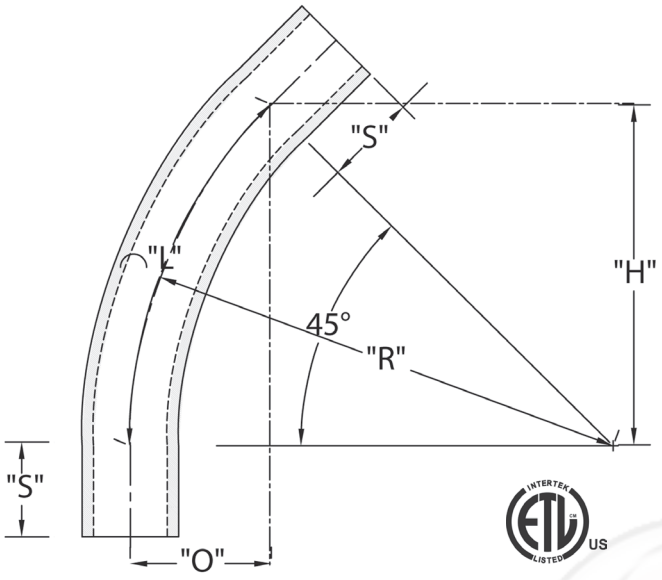

CANTEX 45-Degree Plain End Schedule 40 Special Radius Elbows are used to change the direction of a conduit run by 45 degrees when special radiuses are needed.

- Schedule 40 PVC construction for strength and durability
- For indoor or outdoor use
- Suitable for aboveground or buried
- Plain end connections are solvent weld
- ETL Listed Conforms to UL651 and NEMA TC3
- Made in USA

Schedule 40 45° Elbow 48" Radius Plain End

Part Number	Trade Size	"R"	"O"	"H'	"S" MIN	"L"
5133940	1	48.000	14.000	34.000	1.875	37.700
5133942	1-1/4	48.000	14.000	34.000	2.000	37.700
5133811	1-1/2	48.000	14.000	34.000	2.000	37.700
5133798	2	48.000	14.000	34.000	2.000	37.700
5134010	2-1/2	48.000	14.000	34.000	3.000	37.700
5133781	3	48.000	14.000	34.000	3.125	37.700
5133979	3-1/2	48.000	14.000	34.000	3.250	37.700
5133776	4	48.000	14.000	34.000	3.375	37.700
5133814	5	48.000	14.000	34.000	3.625	37.700
5133813	6	48.000	14.000	34.000	3.750	37.700
5133989D	8*	48.000	14.000	34.000	6.625	37.700

*Not ETL Listed

Dimensions are nominal

Schedule 40 45° Elbow 60" Radius Plain End

Part Number	Trade Size	"R"	"O"	"H'	"S" MIN	"L"
5133808	2	60.000	17.625	34.000	2.000	47.125
5134006	3	60.000	17.625	34.000	3.125	47.125
5133946	4	60.000	17.625	34.000	3.375	47.125
5133947	5	60.000	17.625	34.000	3.625	47.125
5133806	6	60.000	17.625	34.000	6.750	47.125
5133980	8	60.000	17.625	34.000	6.625	47.125

Dimensions are nominal

If you don't see the size you need, additional sizes of special radius elbows are available as non-stocked items. Call for specifications and quotes.

Schedule 40 Special Radius Elbows - Plain End

Additional sizes are available as non-stock items. Call for specifications and quotes.

Schedule 40 30° Elbow Special Radius - Plain End

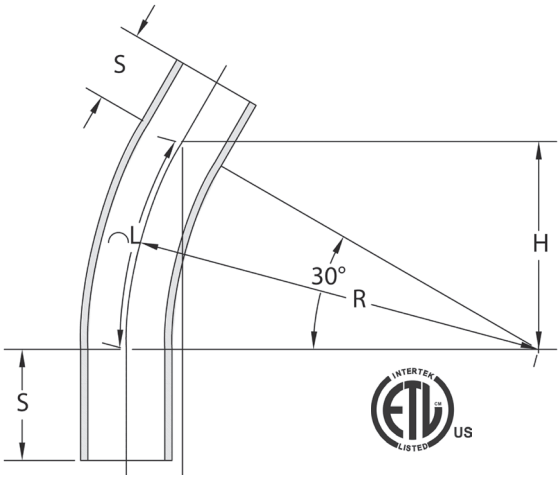

CANTEX 30-Degree Plain End Schedule 40 Special Radius Elbows are used to change the direction of a conduit run by 30 degrees when special radiuses are needed.

- Schedule 40 PVC construction for strength and durability
- For indoor or outdoor use
- Suitable for aboveground or buried
- Plain end connections are solvent weld
- ETL Listed Conforms to UL651 and NEMA TC3
- Made in USA

Schedule 40 30° Elbow 18" Radius Plain End

Part Number	Trade Size	"R"	"O"	"H'	"S" MIN	"L"
5133916	1	18.000	2.438	9.063	1.875	9.438
5133794	1-1/4	18.000	2.438	9.063	2.000	9.438
5133917	1-1/2	18.000	2.438	9.063	2.000	9.438
5133789	2	18.000	2.438	9.063	2.000	9.438
5133752	2-1/2	18.000	2.438	9.063	3.000	9.438
5133969	3	18.000	2.438	9.063	3.125	9.438

Dimensions are nominal

Schedule 40 30° Elbow 24" Radius Plain End

Part Number	Trade Size	"R"	"O"	"H'	"S" MIN	"L"
5136435	1	24.000	3.188	12.000	1.875	12.563
5133913	1-1/4	24.000	3.188	12.000	2.000	12.563
5133803	1-1/2	24.000	3.188	12.000	2.000	12.563
5133796	2	24.000	3.188	12.000	2.000	12.563
5133957	2-1/2	24.000	3.188	12.000	3.000	12.563
5133958	3	24.000	3.188	12.000	3.125	12.563
5136439	3-1/2	24.000	3.188	12.000	3.250	12.563
5133788	4	24.000	3.188	12.000	3.375	12.563

Dimensions are nominal

Schedule 40 30° Elbow 30" Radius Plain End

Part Number	Trade Size	"R"	"O"	"H'	"S" MIN	"L"
5136495	3	30.000	4.000	15.000	3.125	15.688
5133898	4	30.000	4.000	15.000	3.375	15.688

Dimensions are nominal

Schedule 40 30° Elbow 36" Radius Plain End

Part Number	Trade Size	"R"	"O"	"H'	"S" MIN	"L"
5136347	1-1/4	36.000	4.813	18.000	2.000	18.875
5133974	1-1/2	36.000	4.813	18.000	2.000	18.875
5133792	2	36.000	4.813	18.000	2.000	18.875
5133807	2-1/2	36.000	4.813	18.000	3.000	18.875
5133793	3	36.000	4.813	18.000	3.125	18.875
5133938	3-1/2	36.000	4.813	18.000	3.250	18.875
5133790	4	36.000	4.813	18.000	3.375	18.875
5133931	5	36.000	4.813	18.000	3.625	18.875
5133791	6	36.000	4.813	18.000	3.750	18.875

Dimensions are nominal

Schedule 40 30° Elbow 48" Radius Plain End

Part Number	Trade Size	"R"	"O"	"H'	"S" MIN	"L"
5136343	1	48.000	6.438	24.000	1.875	25.125
5133943	1-1/4	48.000	6.438	24.000	2.000	25.125
5133982	1-1/2	48.000	6.438	24.000	2.000	25.125
5133805	2	48.000	6.438	24.000	2.000	25.125
5133809	3	48.000	6.438	24.000	3.125	25.125
5134026	3-1/2	48.000	6.438	24.000	3.250	25.125
5133838	4	48.000	6.438	24.000	3.375	25.125
5133959	5	48.000	6.438	24.000	3.625	25.125
5133861	6	48.000	6.438	24.000	3.750	25.125

Dimensions are nominal

Schedule 40 30° Elbow 60" Radius Plain End

Part Number	Trade Size	"R"	"O"	"H'	"S" MIN	"L"
5134162	2	60	8.063	30.000	2.000	31.438
5136496	3	60	8.063	30.000	3.125	31.438
5133999	4	60	8.063	30.000	3.375	31.438
5133962	5	60	8.063	30.000	3.625	31.438
5133782	6	60	8.063	30.000	3.750	31.438

Dimensions are nominal

Schedule 40 Special Radius Elbows - Plain End

CANTEX

Additional sizes are available as non-stock items. Call for specifications and quotes.

Schedule 40 22-1/2° Elbow Special Radius - Plain End

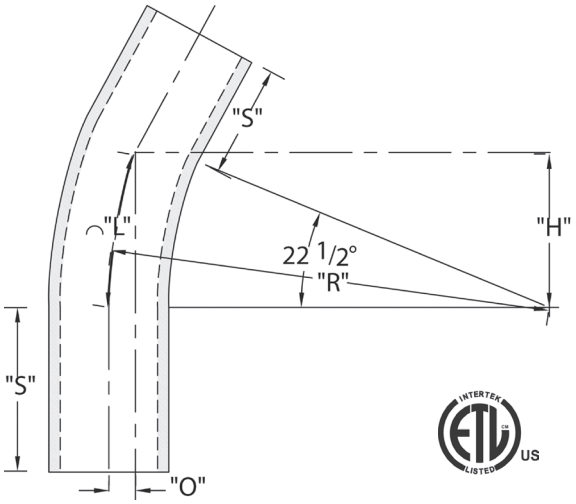

CANTEX 22-1/2-Degree Plain End Schedule 40 Special Radius Elbows are used to change the direction of a conduit run by 22-1/2 degrees when special radiuses are needed.

- Schedule 40 PVC construction for strength and durability
- For indoor or outdoor use
- Suitable for aboveground or buried
- Plain end connections are solvent weld
- ETL Listed Conforms to UL651 and NEMA TC3
- Made in USA

Schedule 40 22-1/2° Elbow 18" Radius Plain End

Part Number	Trade Size	"R"	"O"	"H'	"S" MIN	"L"
5133944	1	18.000	1.375	6.875	1.875	7.063
5136424	1-1/4	18.000	1.375	6.875	2.000	7.063
5133908	1-1/2	18.000	1.375	6.875	2.000	7.063
5133879	2	18.000	1.375	6.875	2.000	7.063
5133936	2-1/2	18.000	1.375	6.875	3.000	7.063
5133845	3	18.000	1.375	6.875	3.125	7.063

Dimensions are nominal

Schedule 40 22-1/2° Elbow 24" Radius Plain End

Part Number	Trade Size	"R"	"O"	"H'	"S" MIN	"L"
5136420	1	24.000	1.813	9.188	1.875	9.438
5136425	1-1/4	24.000	1.813	9.188	2.000	9.438
5136428	1-1/2	24.000	1.813	9.188	2.000	9.438
5133915	2	24.000	1.813	9.188	2.000	9.438
5134019	2-1/2	24.000	1.813	9.188	3.000	9.438
5133903	3	24.000	1.813	9.188	3.125	9.438
5133902	3-1/2	24.000	1.813	9.188	3.250	9.438
5133869	4	24.000	1.813	9.188	3.375	9.438

Dimensions are nominal

Schedule 40 22-1/2° Elbow 30" Radius Plain End

Part Number	Trade Size	"R"	"O"	"H'	"S" MIN	"L"
5136421	1	30.000	2.25	11.500	1.875	11.750
5136433	2-1/2	30.000	2.25	11.500	3.000	11.750
5133929	3	30.000	2.25	11.500	3.125	11.750
5133882	4	30.000	2.25	11.500	3.375	11.750
5133900	5	30.000	2.25	11.500	3.625	11.750

Dimensions are nominal

Schedule 40 22-1/2° Elbow 36" Radius Plain End

Part Number	Trade Size	"R"	"O"	"H'	"S" MIN	"L"
5133975	1	36.000	2.750	13.750	1.875	14.125
5133997	1-1/4	36.000	2.750	13.750	2.000	14.125
5134103	1-1/2	36.000	2.750	13.750	2.000	14.125
5133851	2	36.000	2.750	13.750	2.000	14.125
5133937	2-1/2	36.000	2.750	13.750	3.000	14.125
5133904	3	36.000	2.750	13.750	3.125	14.125
5136437	3-1/2	36.000	2.750	13.750	3.250	14.125
5133853	4	36.000	2.750	13.750	3.375	14.125
5133881	5	36.000	2.750	13.750	3.625	14.125
5133905	6	36.000	2.750	13.750	3.750	14.125

Dimensions are nominal

Schedule 40 22-1/2° Elbow 48" Radius Plain End

Part Number	Trade Size	"R"	"O"	"H'	"S" MIN	"L"
5136431	1-1/2	48.000	3.625	1.375	3.000	18.875
5133984	2	48.000	3.625	1.375	3.125	18.875
5136434	2-1/2	48.000	3.625	1.375	3.000	18.875
5133971	3	48.000	3.625	1.375	3.250	18.875
5133932	4	48.000	3.625	1.375	3.625	18.875
5133930	5	48.000	3.625	1.375	3.750	18.875
5133862	6	48.000	3.625	1.375	6.625	18.875

Dimensions are nominal

Schedule 40 22-1/2° Elbow 60" Radius Plain End

Part Number	Trade Size	"R"	"O"	"H'	"S" MIN	"L"
5134012	4	60	4.563	23.000	3.375	23.563
5134020	5	60	4.563	23.000	3.625	23.563
5134065	6	60	4.563	23.000	3.750	23.563

Dimensions are nominal

Schedule 40 Special Radius Elbows - Plain End

Additional sizes are available as non-stock items. Call for specifications and quotes.

Schedule 40 11-1/4° Elbow Special Radius - Plain End

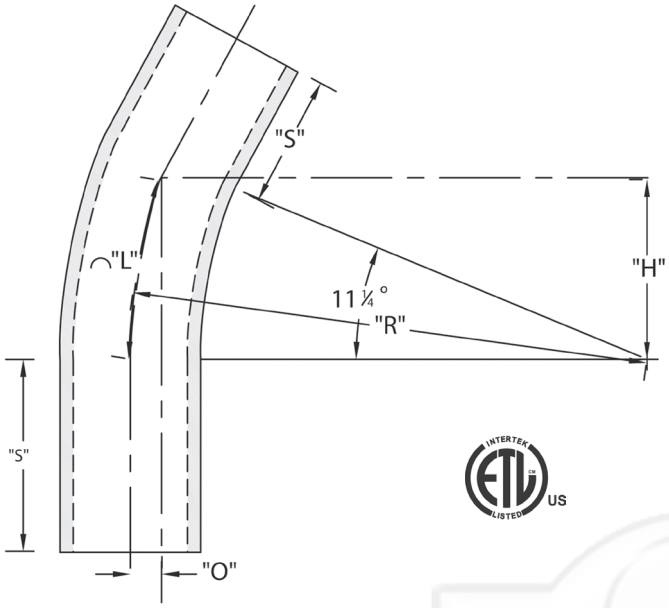

CANTEX 11-1/4-Degree Plain End Schedule 40 Special Radius Elbows are used to change the direction of a conduit run by 11-1/4 degrees when special radiuses are needed.

- Schedule 40 PVC construction for strength and durability
- For indoor or outdoor use
- Suitable for aboveground or buried
- Plain end connections are solvent weld
- ETL Listed Conforms to UL651 and NEMA TC3
- Made in USA

Schedule 40 11-1/4° Elbow 18" Radius Plain End

Part Number	Trade Size	"R"	"O"	"H'	"S" MIN	"L"
5134034	2	18.000	.344	3.500	2.000	3.500
5134035	3	18.000	1.375	3.500	3.125	3.500

Dimensions are nominal

Schedule 40 11-1/4° Elbow 24" Radius Plain End

Part Number	Trade Size	"R"	"O"	"H'	"S" MIN	"L"
5134152	2	24.000	.469	9.188	2.000	1.688
5134036	3	24.000	.469	9.188	3.125	1.688
5133991	4	24.000	.469	9.188	3.250	1.688
5133965	5	24.000	.469	9.188	3.375	1.688

Dimensions are nominal

Schedule 40 11-1/4° Elbow 36" Radius Plain End

Part Number	Trade Size	"R"	"O"	"H'	"S" MIN	"L"
5133996	1-1/4	36.000	.688	7.000	2.000	7.063
5133963	2	36.000	.688	7.000	2.000	7.063
5134129	2-1/2	36.000	.688	7.000	3.000	7.063
5134082	3	36.000	.688	7.000	3.125	7.063
5133910	4	36.000	.688	7.000	3.375	7.063
5133914	5	36.000	.688	7.000	3.625	7.063
5133987	6	36.000	.688	7.000	3.750	7.063

Dimensions are nominal

Schedule 40 11-1/4° Elbow 48" Radius Plain End

Part Number	Trade Size	"R"	"O"	"H'	"S" MIN	"L"
5133998	1-1/4	48.000	.938	9.375	2.000	9.438
5134039	2-1/2	48.000	.938	9.375	3.000	9.438
5134083	3	48.000	.938	9.375	3.125	9.438
5133990	4	48.000	.938	9.375	3.375	9.438
5133977	5	48.000	.938	9.375	3.625	9.438
5134079	6	48.000	.938	9.375	3.750	9.438
5133907	8	48.000	.938	9.375	6.625	9.438

Dimensions are nominal

Schedule 40 11-1/4° Elbow 60" Radius Plain End

Part Number	Trade Size	"R"	"O"	"H'	"S" MIN	"L"
5134084	3	60	1.125	11.688	3.125	11.750
5134157	4	60	1.125	11.688	3.375	11.750
5133978	5	60	1.125	11.688	3.625	11.750
5134080	6	60	1.125	11.688	3.750	11.750

Dimensions are nominal

If you don't see the size you need, additional sizes of special radius elbows are available as non-stocked items. Call for specifications and quotes.