ELLIOTT ELECTRIC SUPPLY
We Deliver...Lower Cost, Quality Products, & Personal Service
2310 N. Stallings Dr.
Nacogdoches, TX 75964-0
Phone: 9365697941
Fax: 9365604685



5121019 2" SCH80 90D 24"R PVC ELBOW

CANTEX,INC

Catalog Number	5121019
Manufacturer	CANTEX,INC
Description	CANTEX 5121019 is a 2 in. x 90-Degree x 24 in. Radius Plain End Schedule 80 Special Radius Elbow used to change the direction of a conduit run by 90-Degree
Weight per unit	3.6 (lbs/each)
Product Category	PVC Sch 80 Elbows

Dimensions and Weight

Size	2 in. x 90-Degree x 24 in. Radius Plain End Schedule 80 Special Radius Elbow

Descriptions

Description	2" SCH80 90D 24"R PVC ELBOW
Features	CANTEX 5121019 is a 2 in. x 90-Degree x 24 in. Radius Plain End Schedule 80 Special Radius Elbow used to change the direction of a conduit run by 90-Degree
Long Description	CANTEX 5121019 is a 2 in. x 90-Degree x 24 in. Radius Plain End Schedule 80 Special Radius Elbow used to change the direction of a conduit run by 90-Degree
Product Type	2 UL80 90 BND 24"R
Extra Long Description	CTX 5121019 2 UL80 90 BND 24"R

Manufacturer Information

Brand	PVC & Accessories
	CANTEX INC.
GTIN	00088700013117
Manufacturers Part Number	5121019
UPC	881780

Taxonomies, Classifications, and Categories

Category Description	PVC ELBOWS
Type	2 in. x 90-Degree x 24 in. Radius Plain End Schedule 80 Special Radius Elbow

Trade Size

Trade Size	2

Packaging

Carton	1
Weight Per Each	3.6 (lbs/each)

Schedule 80 Special Radius Elbows - Plain End

CANTEX

Additional sizes are available as non-stock items. Call for specifications and quotes.

Schedule 80 90° Elbow Special Radius - Plain End

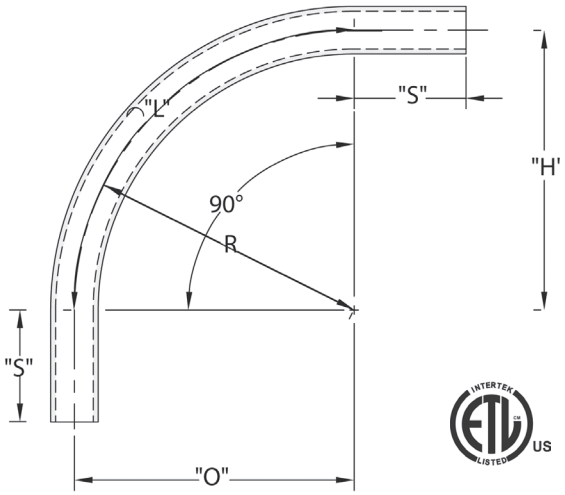

CANTEX Plain End Schedule 80 90-Degree Special Radius Elbows are used to change the direction of a conduit run by 90 degrees when special radiuses are needed.

- Schedule 80 Extra Heavy Wall Nonmetallic PVC construction for strength and durability
- For indoor or outdoor use
- Suitable for aboveground or buried
- Plain end connections are solvent weld
- ETL Listed
- Made in USA

Schedule 80 90° Elbow 18" Radius Plain End

Part Number	Trade Size	"R"	"O"	"H'	"S" MIN	"L"
5121846	1	18	18	18	1.875	28.250
5119822	1-1/4	18	18	18	2.000	28.250
5121848	1-1/2	18	18	18	2.000	28.250
5121099	2	18	18	18	2.000	28.250
5121027	2-1/2	18	18	18	3.000	28.250
5121079	3	18	18	18	3.125	28.250

Dimensions are nominal

Schedule 80 90° Elbow 24" Radius Plain End

Part Number	Trade Size	"R"	"O"	"H'	"S" MIN	"L"
5121018	1	24	24	24	1.875	37.750
5119824	1-1/4	24	24	24	2.000	37.750
5121015	1-1/2	24	24	24	2.000	37.750
5121019	2	24	24	24	2.000	37.750
5121028	2-1/2	24	24	24	3.000	37.750
5121020	3	24	24	24	3.125	37.750
5121022	4	24	24	24	3.375	37.750

Dimensions are nominal

Schedule 80 90° Elbow 30" Radius Plain End

Part Number	Trade Size	"R"	"O"	"H'	"S" MIN	"L"
5121071	2	30	30	30	2.000	47.125
5121052	2-1/2	30	30	30	3.000	47.125
5136570	3	30	30	30	3.125	47.125
5136580	4	30	30	30	3.375	47.125

Dimensions are nominal

Schedule 80 90° Elbow 36" Radius Plain End

Part Number	Trade Size	"R"	"O"	"H'	"S" MIN	"L"
5121080	1	36	36	36	1.875	56.500
5121084	1-1/4	36	36	36	2.000	56.500
5121100	1-1/2	36	36	36	2.000	56.500
5121021	2	36	36	36	2.000	56.500
5121016	2-1/2	36	36	36	3.000	56.500
5121081	3	36	36	36	3.125	56.500
5121023	4	36	36	36	3.375	56.500
5121083	5	36	36	36	3.625	56.500
5121073	6	36	36	36	3.750	56.5

Dimensions are nominal

Schedule 80 90° Elbow 48" Radius Plain End

Part Number	Trade Size	"R"	"O"	"H'	"S" MIN	"L"
5121065	1	48	48	48	1.875	75.375
5121076	1-1/2	48	48	48	2.000	75.375
5121075	2	48	48	48	2.000	75.375
5121030	2-1/2	48	48	48	3.000	75.375
5121082	3	48	48	48	3.125	75.375
5121024	4	48	48	48	3.375	75.375
5121025	5	48	48	48	3.625	75.375
5121026	6	48	48	48	3.750	75.375

Dimensions are nominal

Schedule 80 90° Elbow 60" Radius Plain End

Part Number	Trade Size	"R"	"O"	"H'	"S" MIN	"L"
5121102	1-1/2	60	60	60	2.000	94.250
5121086	2	60	60	60	2.000	94.250
5136970	3	60	60	60	3.125	94.250
5121085	4	60	60	60	3.375	94.250
5121017	5	60	60	60	3.625	94.250
5121087	6	60	60	60	3.750	94.250

Dimensions are nominal

Schedule 80 Special Radius Elbows - Plain End

Additional sizes are available as non-stock items. Call for specifications and quotes.

Schedule 80 45° Elbow Special Radius - Plain End

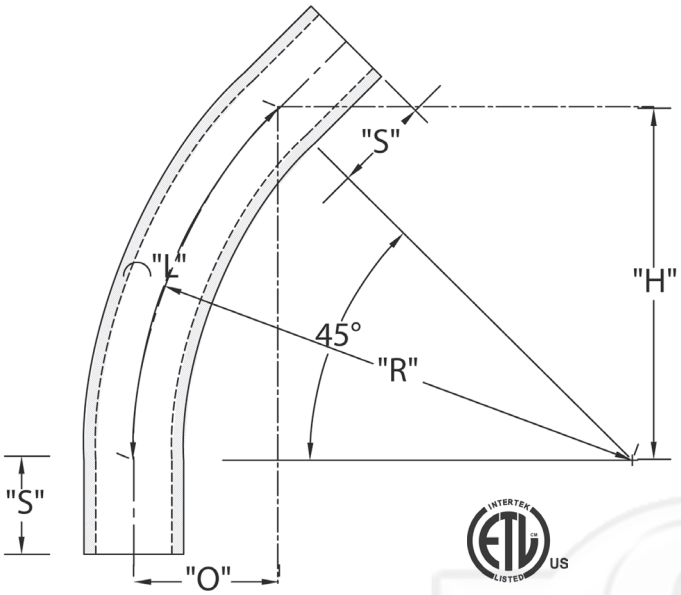

CANTEX Plain End Schedule 80 45-Degree Special Radius Elbows are used to change the direction of a conduit run by 45 degrees when special radiuses are needed.

- Schedule 80 Extra Heavy Wall Nonmetallic PVC construction for strength and durability
- For indoor or outdoor use
- Suitable for aboveground or buried
- Plain end connections are solvent weld
- ETL Listed
- Made in USA

Schedule 80 45° Elbow 18" Radius Plain End

Part Number	Trade Size	"R"	"O"	"H'	"S" MIN	"L"
5121971	1	18.000	5.250	12.75	1.875	14.125
5136511	1-1/4	18.000	5.250	12.75	2.000	14.125
5121037	1-1/2	18.000	5.250	12.75	2.000	14.125
5136551	2	18.000	5.250	12.75	2.000	14.125
5136561	2-1/2	18.000	5.250	12.75	3.000	14.125

Dimensions are nominal

Schedule 80 45° Elbow 24" Radius Plain End

Part Number	Trade Size	"R"	"O"	"H'	"S" MIN	"L"
5136500	1	24.000	17.000	7.000	1.875	18.875
5136512	1-1/4	24.000	17.000	7.000	2.000	18.875
5163533	1-1/2	24.000	17.000	7.000	2.000	18.875
5121101	2	24.000	17.000	7.000	2.000	18.875
5121943	2-1/2	24.000	17.000	7.000	3.000	18.875
5121014	3	24.000	17.000	7.000	3.125	18.875
5121089	4	24.000	17.000	7.000	3.375	18.875

Dimensions are nominal

Schedule 80 45° Elbow 36" Radius Plain End

Part Number	Trade Size	"R"	"O"	"H'	"S" MIN	"L"
5136502	1	36.000	10.500	25.500	1.875	28.250
5136514	1-1/4	36.000	10.500	25.500	2.000	28.250
5136533	1-1/2	36.000	10.500	25.500	2.000	28.250
5121098	2	36.000	10.500	25.500	2.000	28.250
5121150	2-1/2	36.000	10.500	25.500	3.000	28.250
5121077	3	36.000	10.500	25.500	3.125	28.250
5119821	4	36.000	10.500	25.500	3.375	28.250
5119820	5	36.000	10.500	25.500	3.625	28.250
5121072	6	36.000	10.500	25.500	3.750	28.250

Dimensions are nominal

Schedule 80 45° Elbow 48" Radius Plain End

Part Number	Trade Size	"R"	"O"	"H'	"S" MIN	"L"
5136515	1-1/4	48.000	14.000	34.000	2.000	37.688
5121093	2	48.000	14.000	34.000	2.000	37.688
5121078	3	48.000	14.000	34.000	3.125	37.688
5121091	4	48.000	14.000	34.000	3.375	37.688
5121948	5	48.000	14.000	34.000	3.625	37.688
5119830	6	48.000	14.000	34.000	3.750	37.688

Dimensions are nominal

Schedule 80 45° Elbow 60" Radius Plain End

Part Number	Trade Size	"R"	"O"	"H'	"S" MIN	"L"
5136840	1-1/2	60.000	17.625	34.000	2.000	47.125
5136850	2	60.000	17.625	34.000	2.000	47.125
5136860	2-1/2	60.000	17.625	34.000	3.000	47.125
5136810	3	60.000	17.625	34.000	3.125	47.125
5121122	4	60.000	17.625	34.000	3.375	47.125

Dimensions are nominal

Schedule 80 Special Radius Elbows - Plain End

Additional sizes are available as non-stock items. Call for specifications and quotes.

Schedule 80 30° Elbow Special Radius - Plain End

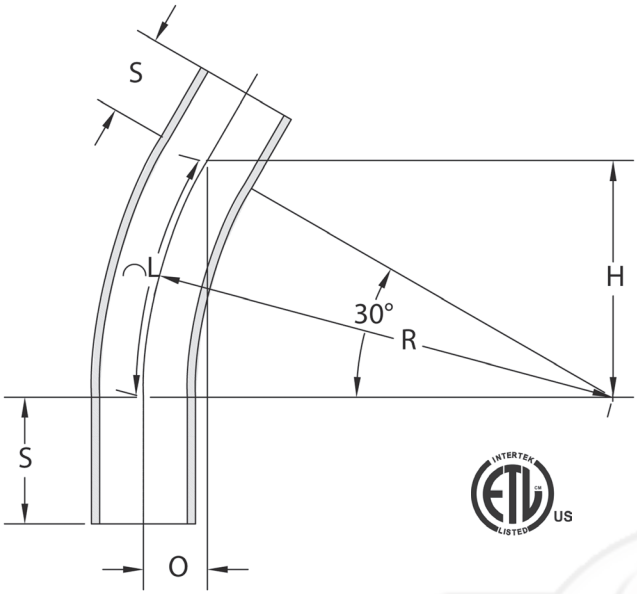

CANTEX Plain End Schedule 80 30-Degree Special Radius Elbows are used to change the direction of a conduit run by 30 degrees when special radiuses are needed.

- Schedule 80 Extra Heavy Wall Nonmetallic PVC construction for strength and durability
- For indoor or outdoor use
- Suitable for aboveground or buried
- Plain end connections are solvent weld
- ETL Listed
- Made in USA

Schedule 80 30° Elbow 18" Radius Plain End

Part Number	Trade Size	"R"	"O"	"H'	"S" MIN	"L"
5136504	1	18.000	2.438	9.063	1.875	9.438
5136516	1-1/4	18.000	2.438	9.063	2.000	9.438
5136535	1-1/2	18.000	2.438	9.063	2.000	9.438
5136553	2	18.000	2.438	9.063	2.000	9.438
5136566	2-1/2	18.000	2.438	9.063	3.000	9.438
5136572	3	18.000	2.438	9.063	3.125	9.438

Dimensions are nominal

Schedule 80 30° Elbow 24" Radius Plain End

Part Number	Trade Size	"R"	"O"	"H'	"S" MIN	"L"
5136505	1	24.000	3.188	12.000	1.875	12.563
5136536	1-1/2	24.000	3.188	12.000	2.000	12.563
5136554	2	24.000	3.188	12.000	2.000	12.563
5136573	3	24.000	3.188	12.000	3.125	12.563
5136582	4	24.000	3.188	12.000	3.375	12.563

Dimensions are nominal

Schedule 80 30° Elbow 36" Radius Plain End

Part Number	Trade Size	"R"	"O"	"H'	"S" MIN	"L"
5136538	1-1/2	36.000	4.813	18.000	2.000	18.875
5121094	2	36.000	4.813	18.000	2.000	18.875
5136566	2-1/2	36.000	4.813	18.000	3.000	18.875
5136575	3	36.000	4.813	18.000	3.125	18.875
5121114	4	36.000	4.813	18.000	3.375	18.875
5136587	5	36.000	4.813	18.000	3.625	18.875
5136595	6	36.000	4.813	18.000	3.750	18.875

Dimensions are nominal

Schedule 80 30° Elbow 48" Radius Plain End

Part Number	Trade Size	"R"	"O"	"H'	"S" MIN	"L"
5121123	4	48.000	6.438	24.000	3.375	25.125
5121115	5	48.000	6.438	24.000	3.625	25.125
5136596	6	48.000	6.438	24.000	3.750	25.125

Dimensions are nominal

Schedule 80 30° Elbow 60" Radius Plain End

Part Number	Trade Size	"R"	"O"	"H'	"S" MIN	"L"
5136750	2	60	8.063	30.000	2.000	31.438

Dimensions are nominal

If you don't see the size you need, additional sizes of special radius elbows are available as non-stocked items. Call for specifications and quotes.