ELLIOTT ELECTRIC SUPPLY
We Deliver...Lower Cost, Quality Products, & Personal Service
2310 N. Stallings Dr.
Nacogdoches, TX 75964-0
Phone: 9365697941
Fax: 9365604685



# 5121024 4" SCH80 90D 48"R PVC ELBOW

*CANTEX,INC*

| | |
|---|---|
| Catalog Number | 5121024 |
| Manufacturer | CANTEX,INC |
| Description | CANTEX 5121024 is a 4 in. x 90-Degree x 48 in. Radius Plain End Schedule 80 Special Radius Elbow used to change the direction of a conduit run by 90-Degree |
| Weight per unit | 5.2 (lbs/each) |
| Product Category | PVC Sch 80 Elbows |

## Dimensions and Weight

| | |
|---|---|
| Size | 4 in. x 90-Degree x 48 in. Radius Plain End Schedule 80 Special Radius Elbow |

## Descriptions

| | |
|---|---|
| Description | 4" SCH80 90D 48"R PVC ELBOW |
| Features | CANTEX 5121024 is a 4 in. x 90-Degree x 48 in. Radius Plain End Schedule 80 Special Radius Elbow used to change the direction of a conduit run by 90-Degree |
| Long Description | CANTEX 5121024 is a 4 in. x 90-Degree x 48 in. Radius Plain End Schedule 80 Special Radius Elbow used to change the direction of a conduit run by 90-Degree |
| Product Type | 4 UL80 90 BND 48"R |
| Extra Long Description | CTX 5121024 4 UL80 90 BND 48"R |

## Manufacturer Information

| | |
|---|---|
| Brand | CANTEX INC. |
| | PVC & Accessories |
| GTIN | 00088700013162 |
| Manufacturers Part Number | 5121024 |
| UPC | 881780 |

## Taxonomies, Classifications, and Categories

| | |
|---|---|
| Category Description | PVC ELBOWS |
| Type | 4 in. x 90-Degree x 48 in. Radius Plain End Schedule 80 Special Radius Elbow |

## Trade Size

| | |
|---|---|
| Trade Size | 4 |

## Packaging

| | |
|---|---|
| Carton | 1 |
| Weight Per Each | 5.2 (lbs/each) |

# Schedule 80 Special Radius Elbows - Plain End

CANTEX

**Additional sizes are available as non-stock items. Call for specifications and quotes.**

## Schedule 80 90° Elbow Special Radius - Plain End

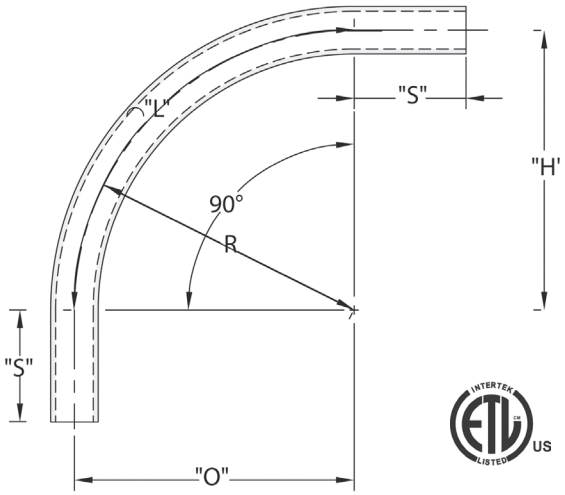


CANTEX Plain End Schedule 80 90-Degree Special Radius Elbows are used to change the direction of a conduit run by 90 degrees when special radiuses are needed.

- Schedule 80 Extra Heavy Wall Nonmetallic PVC construction for strength and durability
- For indoor or outdoor use
- Suitable for aboveground or buried
- Plain end connections are solvent weld
- ETL Listed
- Made in USA

### Schedule 80 90° Elbow 18" Radius Plain End

| Part Number | Trade Size | "R" | "O" | "H' | "S" MIN | "L" |
|---|---|---|---|---|---|---|
| 5121846 | 1 | 18 | 18 | 18 | 1.875 | 28.250 |
| 5119822 | 1-1/4 | 18 | 18 | 18 | 2.000 | 28.250 |
| 5121848 | 1-1/2 | 18 | 18 | 18 | 2.000 | 28.250 |
| 5121099 | 2 | 18 | 18 | 18 | 2.000 | 28.250 |
| 5121027 | 2-1/2 | 18 | 18 | 18 | 3.000 | 28.250 |
| 5121079 | 3 | 18 | 18 | 18 | 3.125 | 28.250 |

Dimensions are nominal

### Schedule 80 90° Elbow 24" Radius Plain End

| Part Number | Trade Size | "R" | "O" | "H' | "S" MIN | "L" |
|---|---|---|---|---|---|---|
| 5121018 | 1 | 24 | 24 | 24 | 1.875 | 37.750 |
| 5119824 | 1-1/4 | 24 | 24 | 24 | 2.000 | 37.750 |
| 5121015 | 1-1/2 | 24 | 24 | 24 | 2.000 | 37.750 |
| 5121019 | 2 | 24 | 24 | 24 | 2.000 | 37.750 |
| 5121028 | 2-1/2 | 24 | 24 | 24 | 3.000 | 37.750 |
| 5121020 | 3 | 24 | 24 | 24 | 3.125 | 37.750 |
| 5121022 | 4 | 24 | 24 | 24 | 3.375 | 37.750 |

Dimensions are nominal

### Schedule 80 90° Elbow 30" Radius Plain End

| Part Number | Trade Size | "R" | "O" | "H' | "S" MIN | "L" |
|---|---|---|---|---|---|---|
| 5121071 | 2 | 30 | 30 | 30 | 2.000 | 47.125 |
| 5121052 | 2-1/2 | 30 | 30 | 30 | 3.000 | 47.125 |
| 5136570 | 3 | 30 | 30 | 30 | 3.125 | 47.125 |
| 5136580 | 4 | 30 | 30 | 30 | 3.375 | 47.125 |

Dimensions are nominal

### Schedule 80 90° Elbow 36" Radius Plain End

| Part Number | Trade Size | "R" | "O" | "H' | "S" MIN | "L" |
|---|---|---|---|---|---|---|
| 5121080 | 1 | 36 | 36 | 36 | 1.875 | 56.500 |
| 5121084 | 1-1/4 | 36 | 36 | 36 | 2.000 | 56.500 |
| 5121100 | 1-1/2 | 36 | 36 | 36 | 2.000 | 56.500 |
| 5121021 | 2 | 36 | 36 | 36 | 2.000 | 56.500 |
| 5121016 | 2-1/2 | 36 | 36 | 36 | 3.000 | 56.500 |
| 5121081 | 3 | 36 | 36 | 36 | 3.125 | 56.500 |
| 5121023 | 4 | 36 | 36 | 36 | 3.375 | 56.500 |
| 5121083 | 5 | 36 | 36 | 36 | 3.625 | 56.500 |
| 5121073 | 6 | 36 | 36 | 36 | 3.750 | 56.5 |

Dimensions are nominal

### Schedule 80 90° Elbow 48" Radius Plain End

| Part Number | Trade Size | "R" | "O" | "H' | "S" MIN | "L" |
|---|---|---|---|---|---|---|
| 5121065 | 1 | 48 | 48 | 48 | 1.875 | 75.375 |
| 5121076 | 1-1/2 | 48 | 48 | 48 | 2.000 | 75.375 |
| 5121075 | 2 | 48 | 48 | 48 | 2.000 | 75.375 |
| 5121030 | 2-1/2 | 48 | 48 | 48 | 3.000 | 75.375 |
| 5121082 | 3 | 48 | 48 | 48 | 3.125 | 75.375 |
| 5121024 | 4 | 48 | 48 | 48 | 3.375 | 75.375 |
| 5121025 | 5 | 48 | 48 | 48 | 3.625 | 75.375 |
| 5121026 | 6 | 48 | 48 | 48 | 3.750 | 75.375 |

Dimensions are nominal

### Schedule 80 90° Elbow 60" Radius Plain End

| Part Number | Trade Size | "R" | "O" | "H' | "S" MIN | "L" |
|---|---|---|---|---|---|---|
| 5121102 | 1-1/2 | 60 | 60 | 60 | 2.000 | 94.250 |
| 5121086 | 2 | 60 | 60 | 60 | 2.000 | 94.250 |
| 5136970 | 3 | 60 | 60 | 60 | 3.125 | 94.250 |
| 5121085 | 4 | 60 | 60 | 60 | 3.375 | 94.250 |
| 5121017 | 5 | 60 | 60 | 60 | 3.625 | 94.250 |
| 5121087 | 6 | 60 | 60 | 60 | 3.750 | 94.250 |

Dimensions are nominal

# Schedule 80 Special Radius Elbows - Plain End

**Additional sizes are available as non-stock items. Call for specifications and quotes.**

## Schedule 80 45° Elbow Special Radius - Plain End

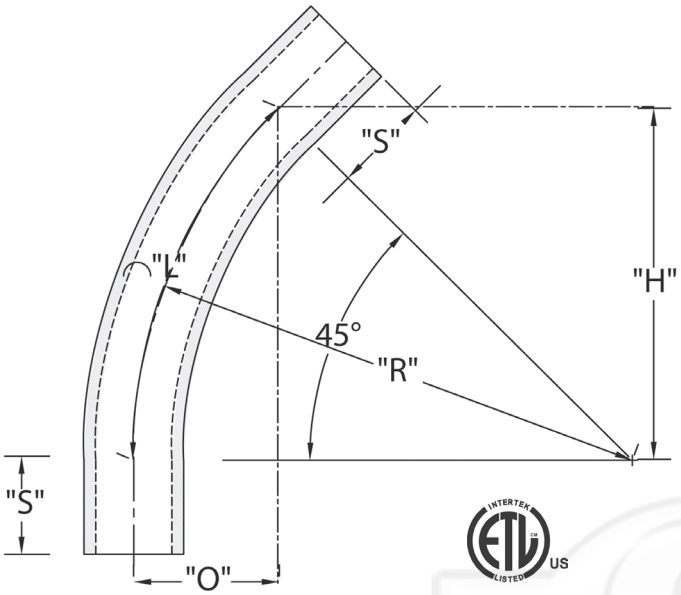


CANTEX Plain End Schedule 80 45-Degree Special Radius Elbows are used to change the direction of a conduit run by 45 degrees when special radiuses are needed.

- Schedule 80 Extra Heavy Wall Nonmetallic PVC construction for strength and durability
- For indoor or outdoor use
- Suitable for aboveground or buried
- Plain end connections are solvent weld
- ETL Listed
- Made in USA

### Schedule 80 45° Elbow 18" Radius Plain End

| Part Number | Trade Size | "R" | "O" | "H' | "S" MIN | "L" |
|---|---|---|---|---|---|---|
| 5121971 | 1 | 18.000 | 5.250 | 12.75 | 1.875 | 14.125 |
| 5136511 | 1-1/4 | 18.000 | 5.250 | 12.75 | 2.000 | 14.125 |
| 5121037 | 1-1/2 | 18.000 | 5.250 | 12.75 | 2.000 | 14.125 |
| 5136551 | 2 | 18.000 | 5.250 | 12.75 | 2.000 | 14.125 |
| 5136561 | 2-1/2 | 18.000 | 5.250 | 12.75 | 3.000 | 14.125 |

Dimensions are nominal

### Schedule 80 45° Elbow 24" Radius Plain End

| Part Number | Trade Size | "R" | "O" | "H' | "S" MIN | "L" |
|---|---|---|---|---|---|---|
| 5136500 | 1 | 24.000 | 17.000 | 7.000 | 1.875 | 18.875 |
| 5136512 | 1-1/4 | 24.000 | 17.000 | 7.000 | 2.000 | 18.875 |
| 5163533 | 1-1/2 | 24.000 | 17.000 | 7.000 | 2.000 | 18.875 |
| 5121101 | 2 | 24.000 | 17.000 | 7.000 | 2.000 | 18.875 |
| 5121943 | 2-1/2 | 24.000 | 17.000 | 7.000 | 3.000 | 18.875 |
| 5121014 | 3 | 24.000 | 17.000 | 7.000 | 3.125 | 18.875 |
| 5121089 | 4 | 24.000 | 17.000 | 7.000 | 3.375 | 18.875 |

Dimensions are nominal

### Schedule 80 45° Elbow 36" Radius Plain End

| Part Number | Trade Size | "R" | "O" | "H' | "S" MIN | "L" |
|---|---|---|---|---|---|---|
| 5136502 | 1 | 36.000 | 10.500 | 25.500 | 1.875 | 28.250 |
| 5136514 | 1-1/4 | 36.000 | 10.500 | 25.500 | 2.000 | 28.250 |
| 5136533 | 1-1/2 | 36.000 | 10.500 | 25.500 | 2.000 | 28.250 |
| 5121098 | 2 | 36.000 | 10.500 | 25.500 | 2.000 | 28.250 |
| 5121150 | 2-1/2 | 36.000 | 10.500 | 25.500 | 3.000 | 28.250 |
| 5121077 | 3 | 36.000 | 10.500 | 25.500 | 3.125 | 28.250 |
| 5119821 | 4 | 36.000 | 10.500 | 25.500 | 3.375 | 28.250 |
| 5119820 | 5 | 36.000 | 10.500 | 25.500 | 3.625 | 28.250 |
| 5121072 | 6 | 36.000 | 10.500 | 25.500 | 3.750 | 28.250 |

Dimensions are nominal

### Schedule 80 45° Elbow 48" Radius Plain End

| Part Number | Trade Size | "R" | "O" | "H' | "S" MIN | "L" |
|---|---|---|---|---|---|---|
| 5136515 | 1-1/4 | 48.000 | 14.000 | 34.000 | 2.000 | 37.688 |
| 5121093 | 2 | 48.000 | 14.000 | 34.000 | 2.000 | 37.688 |
| 5121078 | 3 | 48.000 | 14.000 | 34.000 | 3.125 | 37.688 |
| 5121091 | 4 | 48.000 | 14.000 | 34.000 | 3.375 | 37.688 |
| 5121948 | 5 | 48.000 | 14.000 | 34.000 | 3.625 | 37.688 |
| 5119830 | 6 | 48.000 | 14.000 | 34.000 | 3.750 | 37.688 |

Dimensions are nominal

### Schedule 80 45° Elbow 60" Radius Plain End

| Part Number | Trade Size | "R" | "O" | "H' | "S" MIN | "L" |
|---|---|---|---|---|---|---|
| 5136840 | 1-1/2 | 60.000 | 17.625 | 34.000 | 2.000 | 47.125 |
| 5136850 | 2 | 60.000 | 17.625 | 34.000 | 2.000 | 47.125 |
| 5136860 | 2-1/2 | 60.000 | 17.625 | 34.000 | 3.000 | 47.125 |
| 5136810 | 3 | 60.000 | 17.625 | 34.000 | 3.125 | 47.125 |
| 5121122 | 4 | 60.000 | 17.625 | 34.000 | 3.375 | 47.125 |

Dimensions are nominal

# Schedule 80 Special Radius Elbows - Plain End

**Additional sizes are available as non-stock items. Call for specifications and quotes.**

## Schedule 80 30° Elbow Special Radius - Plain End

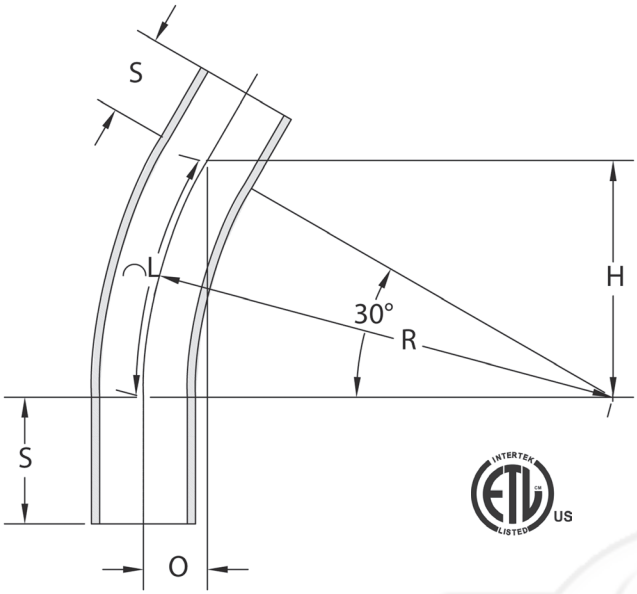


CANTEX Plain End Schedule 80 30-Degree Special Radius Elbows are used to change the direction of a conduit run by 30 degrees when special radiuses are needed.

- Schedule 80 Extra Heavy Wall Nonmetallic PVC construction for strength and durability
- For indoor or outdoor use
- Suitable for aboveground or buried
- Plain end connections are solvent weld
- ETL Listed
- Made in USA

### Schedule 80 30° Elbow 18" Radius Plain End

| Part Number | Trade Size | "R" | "O" | "H' | "S" MIN | "L" |
|---|---|---|---|---|---|---|
| 5136504 | 1 | 18.000 | 2.438 | 9.063 | 1.875 | 9.438 |
| 5136516 | 1-1/4 | 18.000 | 2.438 | 9.063 | 2.000 | 9.438 |
| 5136535 | 1-1/2 | 18.000 | 2.438 | 9.063 | 2.000 | 9.438 |
| 5136553 | 2 | 18.000 | 2.438 | 9.063 | 2.000 | 9.438 |
| 5136566 | 2-1/2 | 18.000 | 2.438 | 9.063 | 3.000 | 9.438 |
| 5136572 | 3 | 18.000 | 2.438 | 9.063 | 3.125 | 9.438 |

Dimensions are nominal

### Schedule 80 30° Elbow 24" Radius Plain End

| Part Number | Trade Size | "R" | "O" | "H' | "S" MIN | "L" |
|---|---|---|---|---|---|---|
| 5136505 | 1 | 24.000 | 3.188 | 12.000 | 1.875 | 12.563 |
| 5136536 | 1-1/2 | 24.000 | 3.188 | 12.000 | 2.000 | 12.563 |
| 5136554 | 2 | 24.000 | 3.188 | 12.000 | 2.000 | 12.563 |
| 5136573 | 3 | 24.000 | 3.188 | 12.000 | 3.125 | 12.563 |
| 5136582 | 4 | 24.000 | 3.188 | 12.000 | 3.375 | 12.563 |

Dimensions are nominal

### Schedule 80 30° Elbow 36" Radius Plain End

| Part Number | Trade Size | "R" | "O" | "H' | "S" MIN | "L" |
|---|---|---|---|---|---|---|
| 5136538 | 1-1/2 | 36.000 | 4.813 | 18.000 | 2.000 | 18.875 |
| 5121094 | 2 | 36.000 | 4.813 | 18.000 | 2.000 | 18.875 |
| 5136566 | 2-1/2 | 36.000 | 4.813 | 18.000 | 3.000 | 18.875 |
| 5136575 | 3 | 36.000 | 4.813 | 18.000 | 3.125 | 18.875 |
| 5121114 | 4 | 36.000 | 4.813 | 18.000 | 3.375 | 18.875 |
| 5136587 | 5 | 36.000 | 4.813 | 18.000 | 3.625 | 18.875 |
| 5136595 | 6 | 36.000 | 4.813 | 18.000 | 3.750 | 18.875 |

Dimensions are nominal

### Schedule 80 30° Elbow 48" Radius Plain End

| Part Number | Trade Size | "R" | "O" | "H' | "S" MIN | "L" |
|---|---|---|---|---|---|---|
| 5121123 | 4 | 48.000 | 6.438 | 24.000 | 3.375 | 25.125 |
| 5121115 | 5 | 48.000 | 6.438 | 24.000 | 3.625 | 25.125 |
| 5136596 | 6 | 48.000 | 6.438 | 24.000 | 3.750 | 25.125 |

Dimensions are nominal

### Schedule 80 30° Elbow 60" Radius Plain End

| Part Number | Trade Size | "R" | "O" | "H' | "S" MIN | "L" |
|---|---|---|---|---|---|---|
| 5136750 | 2 | 60 | 8.063 | 30.000 | 2.000 | 31.438 |

Dimensions are nominal

**If you don't see the size you need, additional sizes of special radius elbows are available as non-stocked items. Call for specifications and quotes.**