ELLIOTT ELECTRIC SUPPLY
We Deliver...Lower Cost, Quality Products, & Personal Service
2310 N. Stallings Dr.
Nacogdoches, TX 75964-0
Phone: 9365697941
Fax: 9365604685

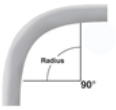

# 5133876 2" SCH40 90D 48"R PVC ELBOW

*CANTEX,INC*

| | |
|---|---|
| Catalog Number | 5133876 |
| Manufacturer | CANTEX,INC |
| Description | CANTEX 5133876 is a 2 in. x 90-Degree x 48 in. Radius Plain End Schedule 40 Special Radius Elbow used to change the direction of a conduit run by 90-Degree |
| Weight per unit | 13.9 (lbs/each) |
| Product Category | PVC Sch 40 Elbows |

## Dimensions and Weight

| | |
|---|---|
| Size | 2 in. x 90-Degree x 48 in. Radius Plain End Schedule 40 Special Radius Elbow |

## Descriptions

| | |
|---|---|
| Description | 2" SCH40 90D 48"R PVC ELBOW |
| Features | CANTEX 5133876 is a 2 in. x 90-Degree x 48 in. Radius Plain End Schedule 40 Special Radius Elbow used to change the direction of a conduit run by 90-Degree |
| Long Description | CANTEX 5133876 is a 2 in. x 90-Degree x 48 in. Radius Plain End Schedule 40 Special Radius Elbow used to change the direction of a conduit run by 90-Degree |
| Product Type | 2 UL40 90 BND 48"R |
| Extra Long Description | CTX 5133876 2 UL40 90 BND 48"R |

## Manufacturer Information

| | |
|---|---|
| Brand | CANTEX INC. |
| | PVC & Accessories |
| GTIN | 00088700014879 |
| Manufacturers Part Number | 5133876 |
| UPC | 881780 |

## Taxonomies, Classifications, and Categories

| | |
|---|---|
| Category Description | PVC ELBOWS |
| Type | 2 in. x 90-Degree x 48 in. Radius Plain End Schedule 40 Special Radius Elbow |

## Trade Size

| | |
|---|---|
| Trade Size | 2 |

## Packaging

| | |
|---|---|
| Carton | 1 |
| Weight Per Each | 13.9 (lbs/each) |

# Schedule 40 Special Radius Elbows - Plain End

**Additional sizes are available as non-stock items. Call for specifications and quotes.**

## Schedule 40 90° Elbow Special Radius - Plain End

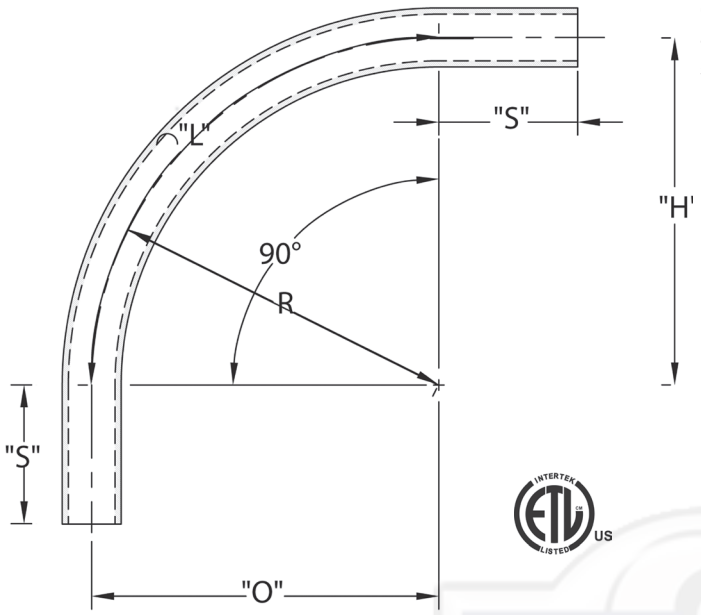


CANTEX Special Radius Plain End Schedule 40 90-Degree Elbows are used to change the direction of a conduit run by 90 degrees when special radiuses are needed.

- Schedule 40 PVC construction for strength and durability
- For indoor or outdoor use
- Suitable for aboveground or buried
- Plain end connections are solvent weld
- ETL Listed
- Made in USA

### Schedule 40 90° Elbow 18" Radius Plain End

| Part Number | Trade Size | "R" | "O" | "H' | "S" MIN | "L" |
|---|---|---|---|---|---|---|
| 5133846 | 1 | 18 | 18 | 18 | 1.875 | 28.250 |
| 5133923 | 1-1/4 | 18 | 18 | 18 | 2.000 | 28.250 |
| 5133839 | 1-1/2 | 18 | 18 | 18 | 2.000 | 28.250 |
| 5133844 | 2 | 18 | 18 | 18 | 2.000 | 28.250 |
| 5133856 | 2-1/2 | 18 | 18 | 18 | 3.000 | 28.250 |
| 5133858 | 3 | 18 | 18 | 18 | 3.125 | 28.250 |

Dimensions are nominal

### Schedule 40 90° Elbow 30" Radius Plain End

| Part Number | Trade Size | "R" | "O" | "H' | "S" MIN | "L" |
|---|---|---|---|---|---|---|
| 5134147 | 3/4 | 30 | 30 | 30 | 1.500 | 47.125 |
| 5136340 | 1 | 30 | 30 | 30 | 1.875 | 47.125 |
| 5133878 | 1-1/4 | 30 | 30 | 30 | 2.000 | 47.125 |
| 5133921 | 1-1/2 | 30 | 30 | 30 | 2.000 | 47.125 |
| 5133920 | 2 | 30 | 30 | 30 | 2.000 | 47.125 |
| 5133981 | 2-1/2 | 30 | 30 | 30 | 3.000 | 47.125 |
| 5133867 | 3 | 30 | 30 | 30 | 3.125 | 47.125 |
| 5133948 | 3-1/2 | 30 | 30 | 30 | 3.250 | 47.125 |
| 5133850 | 4 | 30 | 30 | 30 | 3.375 | 47.125 |
| 5133872 | 5 | 30 | 30 | 30 | 3.625 | 47.125 |

Dimensions are nominal

### Schedule 40 90° Elbow 24" Radius Plain End

| Part Number | Trade Size | "R" | "O" | "H' | "S" MIN | "L" |
|---|---|---|---|---|---|---|
| 5133934 | 3/4 | 24 | 24 | 24 | 1.500 | 37.750 |
| 5133859 | 1 | 24 | 24 | 24 | 1.875 | 37.750 |
| 5133883 | 1-1/4 | 24 | 24 | 24 | 2.000 | 37.750 |
| 5133873 | 1-1/2 | 24 | 24 | 24 | 2.000 | 37.750 |
| 5133836 | 2 | 24 | 24 | 24 | 2.000 | 37.750 |
| 5133847 | 2-1/2 | 24 | 24 | 24 | 3.000 | 37.750 |
| 5133837 | 3 | 24 | 24 | 24 | 3.125 | 37.750 |
| 5133893 | 3-1/2 | 24 | 24 | 24 | 3.250 | 37.750 |
| 5133822 | 4 | 24 | 24 | 24 | 3.375 | 37.750 |

Dimensions are nominal

### Schedule 40 90° Elbow 36" Radius Plain End

| Part Number | Trade Size | "R" | "O" | "H' | "S" MIN | "L" |
|---|---|---|---|---|---|---|
| 5133949 | 3/4 | 36 | 36 | 36 | 1.500 | 56.500 |
| 5133852 | 1 | 36 | 36 | 36 | 1.875 | 56.500 |
| 5133884 | 1-1/4 | 36 | 36 | 36 | 2.000 | 56.500 |
| 5133866 | 1-1/2 | 36 | 36 | 36 | 2.000 | 56.500 |
| 5133848 | 2 | 36 | 36 | 36 | 2.000 | 56.500 |
| 5133857 | 2-1/2 | 36 | 36 | 36 | 3.000 | 56.500 |
| 5133820 | 3 | 36 | 36 | 36 | 3.125 | 56.500 |
| 5133818 | 3-1/2 | 36 | 36 | 36 | 3.250 | 56.500 |
| 5133821 | 4 | 36 | 36 | 36 | 3.375 | 56.500 |
| 5133841 | 5 | 36 | 36 | 36 | 3.625 | 56.500 |
| 5133877 | 6 | 36 | 36 | 36 | 3.750 | 56.500 |

Dimensions are nominal

# Schedule 40 Special Radius Elbows - Plain End

**Additional sizes are available as non-stock items. Call for specifications and quotes.**

## Schedule 40 90° Elbow Special Radius - Plain End

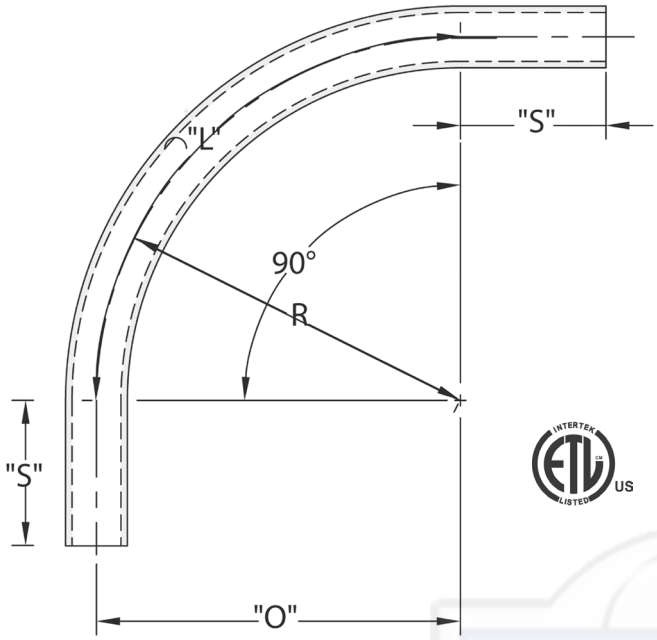


CANTEX Special Radius Plain End Schedule 40 90-Degree Special Radius Elbows are used to change the direction of a conduit run by 90 degrees when special radiuses are needed.

"H"

- Schedule 40 PVC construction for strength and durability
- For indoor or outdoor use
- Suitable for aboveground or buried
- Plain end connections are solvent weld
- ETL Listed Conforms to UL651 and NEMA TC3
- Made in USA

### Schedule 40 90° Elbow 48" Radius Plain End

| Part Number | Trade Size | "R" | "O" | "H' | "S" MIN | "L" |
|---|---|---|---|---|---|---|
| 5133864 | 1 | 48 | 48 | 48 | 1.875 | 75.375 |
| 5133871 | 1-1/4 | 48 | 48 | 48 | 2.000 | 75.375 |
| 5133865 | 1-1/2 | 48 | 48 | 48 | 2.000 | 75.375 |
| 5133876 | 2 | 48 | 48 | 48 | 2.000 | 75.375 |
| 5133849 | 2-1/2 | 48 | 48 | 48 | 3.000 | 75.375 |
| 5133817 | 3 | 48 | 48 | 48 | 3.125 | 75.375 |
| 5133892 | 3-1/2 | 48 | 48 | 48 | 3.250 | 75.375 |
| 5133843 | 4 | 48 | 48 | 48 | 3.375 | 75.375 |
| 5133842 | 5 | 48 | 48 | 48 | 3.625 | 75.375 |
| 5133816 | 6 | 48 | 48 | 48 | 3.750 | 75.375 |
| 5133993D* | 8 | 48 | 48 | 48 | 6.625 | 75.375 |

*Not ETL listed

Dimensions are nominal

### Schedule 40 90° Elbow 60" Radius Plain End

| Part Number | Trade Size | "R" | "O" | "H' | "S" MIN | "L" |
|---|---|---|---|---|---|---|
| 5133786 | 2 | 60 | 60 | 60 | 2.000 | 94.250 |
| 5134046 | 2-1/2 | 60 | 60 | 60 | 3.000 | 94.250 |
| 5133819 | 3 | 60 | 60 | 60 | 3.125 | 94.250 |
| 5133925 | 3-1/2 | 60 | 60 | 60 | 3.250 | 94.250 |
| 5133854 | 4 | 60 | 60 | 60 | 3.375 | 94.250 |
| 5133885 | 5 | 60 | 60 | 60 | 3.625 | 94.250 |
| 5133886 | 6 | 60 | 60 | 60 | 3.750 | 94.250 |

Dimensions are nominal

**If you don't see the size you need, additional sizes of special radius elbows are available as non-stocked items. Call for specifications and quotes.**

# Schedule 40 Special Radius Elbows - Plain End

**Additional sizes are available as non-stock items. Call for specifications and quotes.**

## Schedule 40 45° Elbow Special Radius - Plain End

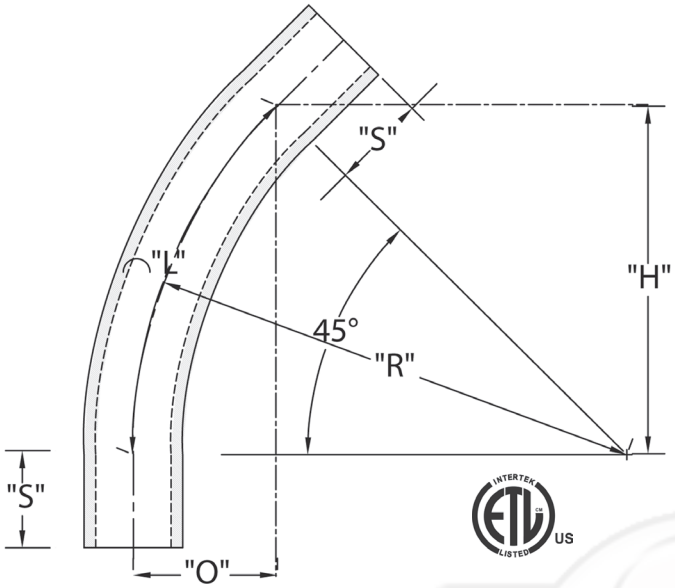


CANTEX 45-Degree Plain End Schedule 40 Special Radius Elbows are used to change the direction of a conduit run by 45 degrees when special radiuses are needed.

- Schedule 40 PVC construction for strength and durability
- For indoor or outdoor use
- Suitable for aboveground or buried
- Plain end connections are solvent weld
- ETL Listed Conforms to UL651 and NEMA TC3
- Made in USA

### Schedule 40 45° Elbow 18" Radius Plain End

| Part Number | Trade Size | "R" | "O" | "H' | "S" MIN | "L" |
|---|---|---|---|---|---|---|
| 5134008 | 1 | 18.000 | 5.250 | 12.75 | 1.875 | 14.125 |
| 5136344 | 1-1/4 | 18.000 | 5.250 | 12.75 | 2.000 | 14.125 |
| 5133840 | 1-1/2 | 18.000 | 5.250 | 12.75 | 2.000 | 14.125 |
| 5133797 | 2 | 18.000 | 5.250 | 12.75 | 2.000 | 14.125 |
| 5133973 | 2-1/2 | 18.000 | 5.250 | 12.75 | 3.000 | 14.125 |
| 5133799 | 3 | 18.000 | 5.250 | 12.75 | 3.125 | 14.125 |

Dimensions are nominal

### Schedule 40 45° Elbow 30" Radius Plain End

| Part Number | Trade Size | "R" | "O" | "H' | "S" MIN | "L" |
|---|---|---|---|---|---|---|
| 5136341 | 1 | 30.000 | 8.688 | 21.250 | 1.875 | 23.56 |
| 5136348 | 1-1/2 | 30.000 | 8.688 | 21.250 | 2.000 | 23.56 |
| 5133918 | 2 | 30.000 | 8.688 | 21.250 | 2.000 | 23.56 |
| 5133896 | 2-1/2 | 30.000 | 8.688 | 21.250 | 3.000 | 23.56 |
| 5133897 | 3 | 30.000 | 8.688 | 21.250 | 3.125 | 23.56 |
| 5133953 | 4 | 30.000 | 8.688 | 21.250 | 3.375 | 23.56 |
| 5133954 | 5 | 30.000 | 8.688 | 21.250 | 3.625 | 23.56 |

Dimensions are nominal

### Schedule 40 45° Elbow 24" Radius Plain End

| Part Number | Trade Size | "R" | "O" | "H' | "S" MIN | "L" |
|---|---|---|---|---|---|---|
| 5133933 | 3/4 | 24.000 | 17.000 | 7.000 | 1.500 | 18.875 |
| 5133875 | 1 | 24.000 | 17.000 | 7.000 | 1.875 | 18.875 |
| 5133941 | 1-1/4 | 24.000 | 17.000 | 7.000 | 2.000 | 18.875 |
| 5133874 | 1-1/2 | 24.000 | 17.000 | 7.000 | 2.000 | 18.875 |
| 5133815 | 2 | 24.000 | 17.000 | 7.000 | 2.000 | 18.875 |
| 5133935 | 2-1/2 | 24.000 | 17.000 | 7.000 | 3.000 | 18.875 |
| 5133800 | 3 | 24.000 | 17.000 | 7.000 | 3.125 | 18.875 |
| 5133802 | 3-1/2 | 24.000 | 17.000 | 7.000 | 3.250 | 18.875 |
| 5133812 | 4 | 24.000 | 17.000 | 7.000 | 3.375 | 18.875 |

Dimensions are nominal

### Schedule 40 45° Elbow 36" Radius Plain End

| Part Number | Trade Size | "R" | "O" | "H' | "S" MIN | "L" |
|---|---|---|---|---|---|---|
| 5133950 | 3/4 | 36.000 | 10.500 | 25.500 | 1.500 | 28.250 |
| 5133919 | 1 | 36.000 | 10.500 | 25.500 | 1.875 | 28.250 |
| 5133956 | 1-1/4 | 36.000 | 10.500 | 25.500 | 2.000 | 28.250 |
| 5133810 | 1-1/2 | 36.000 | 10.500 | 25.500 | 2.000 | 28.250 |
| 5133778 | 2 | 36.000 | 10.500 | 25.500 | 2.000 | 28.250 |
| 5133801 | 2-1/2 | 36.000 | 10.500 | 25.500 | 3.000 | 28.250 |
| 5133779 | 3 | 36.000 | 10.500 | 25.500 | 3.125 | 28.250 |
| 5133939 | 3-1/2 | 36.000 | 10.500 | 25.500 | 3.250 | 28.250 |
| 5133777 | 4 | 36.000 | 10.500 | 25.500 | 3.375 | 28.250 |
| 5133780 | 5 | 36.000 | 10.500 | 25.500 | 3.625 | 28.250 |
| 5133880 | 6 | 36.000 | 10.500 | 25.500 | 3.750 | 28.250 |
| 5133988D | 8* | 36.000 | 10.500 | 25.500 | 6.625 | 28.250 |

*Not ETL Listed

Dimensions are nominal

# Schedule 40 Special Radius Elbows - Plain End

**Additional sizes are available as non-stock items. Call for specifications and quotes.**

## Schedule 40 45° Elbow Special Radius - Plain End

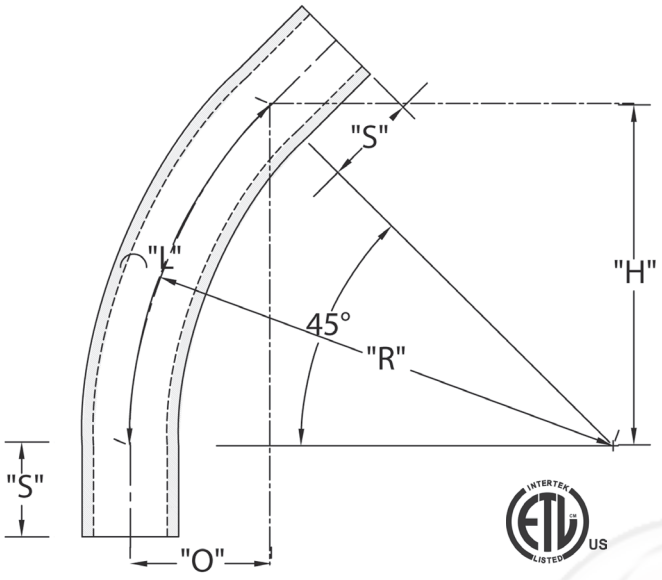


CANTEX 45-Degree Plain End Schedule 40 Special Radius Elbows are used to change the direction of a conduit run by 45 degrees when special radiuses are needed.

- Schedule 40 PVC construction for strength and durability
- For indoor or outdoor use
- Suitable for aboveground or buried
- Plain end connections are solvent weld
- ETL Listed Conforms to UL651 and NEMA TC3
- Made in USA

### Schedule 40 45° Elbow 48" Radius Plain End

| Part Number | Trade Size | "R" | "O" | "H' | "S" MIN | "L" |
|---|---|---|---|---|---|---|
| 5133940 | 1 | 48.000 | 14.000 | 34.000 | 1.875 | 37.700 |
| 5133942 | 1-1/4 | 48.000 | 14.000 | 34.000 | 2.000 | 37.700 |
| 5133811 | 1-1/2 | 48.000 | 14.000 | 34.000 | 2.000 | 37.700 |
| 5133798 | 2 | 48.000 | 14.000 | 34.000 | 2.000 | 37.700 |
| 5134010 | 2-1/2 | 48.000 | 14.000 | 34.000 | 3.000 | 37.700 |
| 5133781 | 3 | 48.000 | 14.000 | 34.000 | 3.125 | 37.700 |
| 5133979 | 3-1/2 | 48.000 | 14.000 | 34.000 | 3.250 | 37.700 |
| 5133776 | 4 | 48.000 | 14.000 | 34.000 | 3.375 | 37.700 |
| 5133814 | 5 | 48.000 | 14.000 | 34.000 | 3.625 | 37.700 |
| 5133813 | 6 | 48.000 | 14.000 | 34.000 | 3.750 | 37.700 |
| 5133989D | 8* | 48.000 | 14.000 | 34.000 | 6.625 | 37.700 |

*Not ETL Listed

Dimensions are nominal

### Schedule 40 45° Elbow 60" Radius Plain End

| Part Number | Trade Size | "R" | "O" | "H' | "S" MIN | "L" |
|---|---|---|---|---|---|---|
| 5133808 | 2 | 60.000 | 17.625 | 34.000 | 2.000 | 47.125 |
| 5134006 | 3 | 60.000 | 17.625 | 34.000 | 3.125 | 47.125 |
| 5133946 | 4 | 60.000 | 17.625 | 34.000 | 3.375 | 47.125 |
| 5133947 | 5 | 60.000 | 17.625 | 34.000 | 3.625 | 47.125 |
| 5133806 | 6 | 60.000 | 17.625 | 34.000 | 6.750 | 47.125 |
| 5133980 | 8 | 60.000 | 17.625 | 34.000 | 6.625 | 47.125 |

Dimensions are nominal

**If you don't see the size you need, additional sizes of special radius elbows are available as non-stocked items. Call for specifications and quotes.**

# Schedule 40 Special Radius Elbows - Plain End

**Additional sizes are available as non-stock items. Call for specifications and quotes.**

## Schedule 40 30° Elbow Special Radius - Plain End

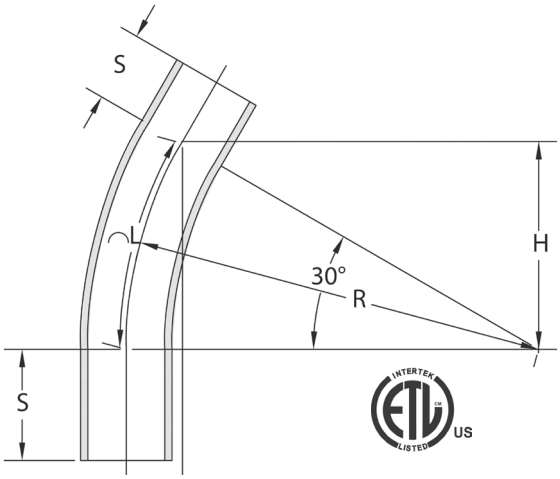


CANTEX 30-Degree Plain End Schedule 40 Special Radius Elbows are used to change the direction of a conduit run by 30 degrees when special radiuses are needed.

- Schedule 40 PVC construction for strength and durability
- For indoor or outdoor use
- Suitable for aboveground or buried
- Plain end connections are solvent weld
- ETL Listed Conforms to UL651 and NEMA TC3
- Made in USA

### Schedule 40 30° Elbow 18" Radius Plain End

| Part Number | Trade Size | "R" | "O" | "H' | "S" MIN | "L" |
|---|---|---|---|---|---|---|
| 5133916 | 1 | 18.000 | 2.438 | 9.063 | 1.875 | 9.438 |
| 5133794 | 1-1/4 | 18.000 | 2.438 | 9.063 | 2.000 | 9.438 |
| 5133917 | 1-1/2 | 18.000 | 2.438 | 9.063 | 2.000 | 9.438 |
| 5133789 | 2 | 18.000 | 2.438 | 9.063 | 2.000 | 9.438 |
| 5133752 | 2-1/2 | 18.000 | 2.438 | 9.063 | 3.000 | 9.438 |
| 5133969 | 3 | 18.000 | 2.438 | 9.063 | 3.125 | 9.438 |

Dimensions are nominal

### Schedule 40 30° Elbow 24" Radius Plain End

| Part Number | Trade Size | "R" | "O" | "H' | "S" MIN | "L" |
|---|---|---|---|---|---|---|
| 5136435 | 1 | 24.000 | 3.188 | 12.000 | 1.875 | 12.563 |
| 5133913 | 1-1/4 | 24.000 | 3.188 | 12.000 | 2.000 | 12.563 |
| 5133803 | 1-1/2 | 24.000 | 3.188 | 12.000 | 2.000 | 12.563 |
| 5133796 | 2 | 24.000 | 3.188 | 12.000 | 2.000 | 12.563 |
| 5133957 | 2-1/2 | 24.000 | 3.188 | 12.000 | 3.000 | 12.563 |
| 5133958 | 3 | 24.000 | 3.188 | 12.000 | 3.125 | 12.563 |
| 5136439 | 3-1/2 | 24.000 | 3.188 | 12.000 | 3.250 | 12.563 |
| 5133788 | 4 | 24.000 | 3.188 | 12.000 | 3.375 | 12.563 |

Dimensions are nominal

### Schedule 40 30° Elbow 30" Radius Plain End

| Part Number | Trade Size | "R" | "O" | "H' | "S" MIN | "L" |
|---|---|---|---|---|---|---|
| 5136495 | 3 | 30.000 | 4.000 | 15.000 | 3.125 | 15.688 |
| 5133898 | 4 | 30.000 | 4.000 | 15.000 | 3.375 | 15.688 |

Dimensions are nominal

### Schedule 40 30° Elbow 36" Radius Plain End

| Part Number | Trade Size | "R" | "O" | "H' | "S" MIN | "L" |
|---|---|---|---|---|---|---|
| 5136347 | 1-1/4 | 36.000 | 4.813 | 18.000 | 2.000 | 18.875 |
| 5133974 | 1-1/2 | 36.000 | 4.813 | 18.000 | 2.000 | 18.875 |
| 5133792 | 2 | 36.000 | 4.813 | 18.000 | 2.000 | 18.875 |
| 5133807 | 2-1/2 | 36.000 | 4.813 | 18.000 | 3.000 | 18.875 |
| 5133793 | 3 | 36.000 | 4.813 | 18.000 | 3.125 | 18.875 |
| 5133938 | 3-1/2 | 36.000 | 4.813 | 18.000 | 3.250 | 18.875 |
| 5133790 | 4 | 36.000 | 4.813 | 18.000 | 3.375 | 18.875 |
| 5133931 | 5 | 36.000 | 4.813 | 18.000 | 3.625 | 18.875 |
| 5133791 | 6 | 36.000 | 4.813 | 18.000 | 3.750 | 18.875 |

Dimensions are nominal

### Schedule 40 30° Elbow 48" Radius Plain End

| Part Number | Trade Size | "R" | "O" | "H' | "S" MIN | "L" |
|---|---|---|---|---|---|---|
| 5136343 | 1 | 48.000 | 6.438 | 24.000 | 1.875 | 25.125 |
| 5133943 | 1-1/4 | 48.000 | 6.438 | 24.000 | 2.000 | 25.125 |
| 5133982 | 1-1/2 | 48.000 | 6.438 | 24.000 | 2.000 | 25.125 |
| 5133805 | 2 | 48.000 | 6.438 | 24.000 | 2.000 | 25.125 |
| 5133809 | 3 | 48.000 | 6.438 | 24.000 | 3.125 | 25.125 |
| 5134026 | 3-1/2 | 48.000 | 6.438 | 24.000 | 3.250 | 25.125 |
| 5133838 | 4 | 48.000 | 6.438 | 24.000 | 3.375 | 25.125 |
| 5133959 | 5 | 48.000 | 6.438 | 24.000 | 3.625 | 25.125 |
| 5133861 | 6 | 48.000 | 6.438 | 24.000 | 3.750 | 25.125 |

Dimensions are nominal

### Schedule 40 30° Elbow 60" Radius Plain End

| Part Number | Trade Size | "R" | "O" | "H' | "S" MIN | "L" |
|---|---|---|---|---|---|---|
| 5134162 | 2 | 60 | 8.063 | 30.000 | 2.000 | 31.438 |
| 5136496 | 3 | 60 | 8.063 | 30.000 | 3.125 | 31.438 |
| 5133999 | 4 | 60 | 8.063 | 30.000 | 3.375 | 31.438 |
| 5133962 | 5 | 60 | 8.063 | 30.000 | 3.625 | 31.438 |
| 5133782 | 6 | 60 | 8.063 | 30.000 | 3.750 | 31.438 |

Dimensions are nominal

# Schedule 40 Special Radius Elbows - Plain End

CANTEX

**Additional sizes are available as non-stock items. Call for specifications and quotes.**

## Schedule 40 22-1/2° Elbow Special Radius - Plain End

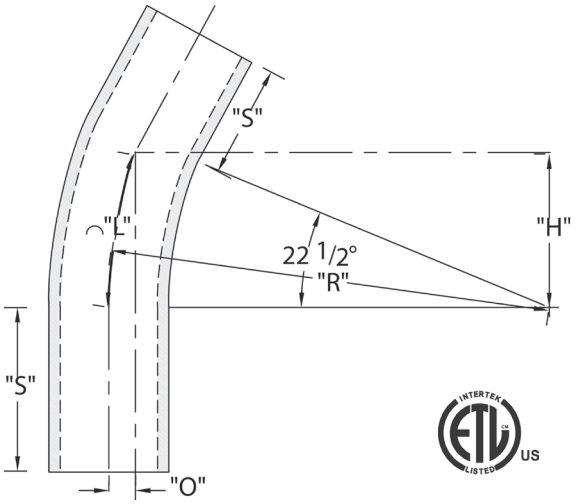


CANTEX 22-1/2-Degree Plain End Schedule 40 Special Radius Elbows are used to change the direction of a conduit run by 22-1/2 degrees when special radiuses are needed.

- Schedule 40 PVC construction for strength and durability
- For indoor or outdoor use
- Suitable for aboveground or buried
- Plain end connections are solvent weld
- ETL Listed Conforms to UL651 and NEMA TC3
- Made in USA

### Schedule 40 22-1/2° Elbow 18" Radius Plain End

| Part Number | Trade Size | "R" | "O" | "H' | "S" MIN | "L" |
|---|---|---|---|---|---|---|
| 5133944 | 1 | 18.000 | 1.375 | 6.875 | 1.875 | 7.063 |
| 5136424 | 1-1/4 | 18.000 | 1.375 | 6.875 | 2.000 | 7.063 |
| 5133908 | 1-1/2 | 18.000 | 1.375 | 6.875 | 2.000 | 7.063 |
| 5133879 | 2 | 18.000 | 1.375 | 6.875 | 2.000 | 7.063 |
| 5133936 | 2-1/2 | 18.000 | 1.375 | 6.875 | 3.000 | 7.063 |
| 5133845 | 3 | 18.000 | 1.375 | 6.875 | 3.125 | 7.063 |

Dimensions are nominal

### Schedule 40 22-1/2° Elbow 24" Radius Plain End

| Part Number | Trade Size | "R" | "O" | "H' | "S" MIN | "L" |
|---|---|---|---|---|---|---|
| 5136420 | 1 | 24.000 | 1.813 | 9.188 | 1.875 | 9.438 |
| 5136425 | 1-1/4 | 24.000 | 1.813 | 9.188 | 2.000 | 9.438 |
| 5136428 | 1-1/2 | 24.000 | 1.813 | 9.188 | 2.000 | 9.438 |
| 5133915 | 2 | 24.000 | 1.813 | 9.188 | 2.000 | 9.438 |
| 5134019 | 2-1/2 | 24.000 | 1.813 | 9.188 | 3.000 | 9.438 |
| 5133903 | 3 | 24.000 | 1.813 | 9.188 | 3.125 | 9.438 |
| 5133902 | 3-1/2 | 24.000 | 1.813 | 9.188 | 3.250 | 9.438 |
| 5133869 | 4 | 24.000 | 1.813 | 9.188 | 3.375 | 9.438 |

Dimensions are nominal

### Schedule 40 22-1/2° Elbow 30" Radius Plain End

| Part Number | Trade Size | "R" | "O" | "H' | "S" MIN | "L" |
|---|---|---|---|---|---|---|
| 5136421 | 1 | 30.000 | 2.25 | 11.500 | 1.875 | 11.750 |
| 5136433 | 2-1/2 | 30.000 | 2.25 | 11.500 | 3.000 | 11.750 |
| 5133929 | 3 | 30.000 | 2.25 | 11.500 | 3.125 | 11.750 |
| 5133882 | 4 | 30.000 | 2.25 | 11.500 | 3.375 | 11.750 |
| 5133900 | 5 | 30.000 | 2.25 | 11.500 | 3.625 | 11.750 |

Dimensions are nominal

### Schedule 40 22-1/2° Elbow 36" Radius Plain End

| Part Number | Trade Size | "R" | "O" | "H' | "S" MIN | "L" |
|---|---|---|---|---|---|---|
| 5133975 | 1 | 36.000 | 2.750 | 13.750 | 1.875 | 14.125 |
| 5133997 | 1-1/4 | 36.000 | 2.750 | 13.750 | 2.000 | 14.125 |
| 5134103 | 1-1/2 | 36.000 | 2.750 | 13.750 | 2.000 | 14.125 |
| 5133851 | 2 | 36.000 | 2.750 | 13.750 | 2.000 | 14.125 |
| 5133937 | 2-1/2 | 36.000 | 2.750 | 13.750 | 3.000 | 14.125 |
| 5133904 | 3 | 36.000 | 2.750 | 13.750 | 3.125 | 14.125 |
| 5136437 | 3-1/2 | 36.000 | 2.750 | 13.750 | 3.250 | 14.125 |
| 5133853 | 4 | 36.000 | 2.750 | 13.750 | 3.375 | 14.125 |
| 5133881 | 5 | 36.000 | 2.750 | 13.750 | 3.625 | 14.125 |
| 5133905 | 6 | 36.000 | 2.750 | 13.750 | 3.750 | 14.125 |

Dimensions are nominal

### Schedule 40 22-1/2° Elbow 48" Radius Plain End

| Part Number | Trade Size | "R" | "O" | "H' | "S" MIN | "L" |
|---|---|---|---|---|---|---|
| 5136431 | 1-1/2 | 48.000 | 3.625 | 1.375 | 3.000 | 18.875 |
| 5133984 | 2 | 48.000 | 3.625 | 1.375 | 3.125 | 18.875 |
| 5136434 | 2-1/2 | 48.000 | 3.625 | 1.375 | 3.000 | 18.875 |
| 5133971 | 3 | 48.000 | 3.625 | 1.375 | 3.250 | 18.875 |
| 5133932 | 4 | 48.000 | 3.625 | 1.375 | 3.625 | 18.875 |
| 5133930 | 5 | 48.000 | 3.625 | 1.375 | 3.750 | 18.875 |
| 5133862 | 6 | 48.000 | 3.625 | 1.375 | 6.625 | 18.875 |

Dimensions are nominal

### Schedule 40 22-1/2° Elbow 60" Radius Plain End

| Part Number | Trade Size | "R" | "O" | "H' | "S" MIN | "L" |
|---|---|---|---|---|---|---|
| 5134012 | 4 | 60 | 4.563 | 23.000 | 3.375 | 23.563 |
| 5134020 | 5 | 60 | 4.563 | 23.000 | 3.625 | 23.563 |
| 5134065 | 6 | 60 | 4.563 | 23.000 | 3.750 | 23.563 |

Dimensions are nominal

# Schedule 40 Special Radius Elbows - Plain End

**Additional sizes are available as non-stock items. Call for specifications and quotes.**

## Schedule 40 11-1/4° Elbow Special Radius - Plain End

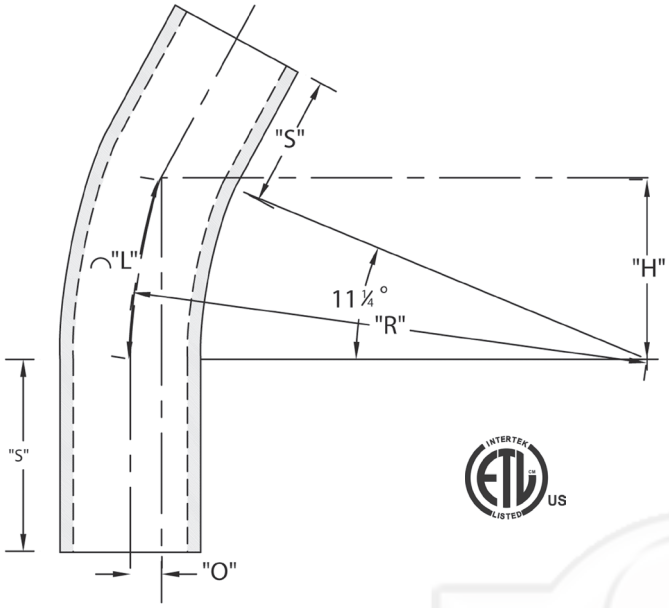


CANTEX 11-1/4-Degree Plain End Schedule 40 Special Radius Elbows are used to change the direction of a conduit run by 11-1/4 degrees when special radiuses are needed.

- Schedule 40 PVC construction for strength and durability
- For indoor or outdoor use
- Suitable for aboveground or buried
- Plain end connections are solvent weld
- ETL Listed Conforms to UL651 and NEMA TC3
- Made in USA

### Schedule 40 11-1/4° Elbow 18" Radius Plain End

| Part Number | Trade Size | "R" | "O" | "H' | "S" MIN | "L" |
|---|---|---|---|---|---|---|
| 5134034 | 2 | 18.000 | .344 | 3.500 | 2.000 | 3.500 |
| 5134035 | 3 | 18.000 | 1.375 | 3.500 | 3.125 | 3.500 |

Dimensions are nominal

### Schedule 40 11-1/4° Elbow 24" Radius Plain End

| Part Number | Trade Size | "R" | "O" | "H' | "S" MIN | "L" |
|---|---|---|---|---|---|---|
| 5134152 | 2 | 24.000 | .469 | 9.188 | 2.000 | 1.688 |
| 5134036 | 3 | 24.000 | .469 | 9.188 | 3.125 | 1.688 |
| 5133991 | 4 | 24.000 | .469 | 9.188 | 3.250 | 1.688 |
| 5133965 | 5 | 24.000 | .469 | 9.188 | 3.375 | 1.688 |

Dimensions are nominal

### Schedule 40 11-1/4° Elbow 36" Radius Plain End

| Part Number | Trade Size | "R" | "O" | "H' | "S" MIN | "L" |
|---|---|---|---|---|---|---|
| 5133996 | 1-1/4 | 36.000 | .688 | 7.000 | 2.000 | 7.063 |
| 5133963 | 2 | 36.000 | .688 | 7.000 | 2.000 | 7.063 |
| 5134129 | 2-1/2 | 36.000 | .688 | 7.000 | 3.000 | 7.063 |
| 5134082 | 3 | 36.000 | .688 | 7.000 | 3.125 | 7.063 |
| 5133910 | 4 | 36.000 | .688 | 7.000 | 3.375 | 7.063 |
| 5133914 | 5 | 36.000 | .688 | 7.000 | 3.625 | 7.063 |
| 5133987 | 6 | 36.000 | .688 | 7.000 | 3.750 | 7.063 |

Dimensions are nominal

### Schedule 40 11-1/4° Elbow 48" Radius Plain End

| Part Number | Trade Size | "R" | "O" | "H' | "S" MIN | "L" |
|---|---|---|---|---|---|---|
| 5133998 | 1-1/4 | 48.000 | .938 | 9.375 | 2.000 | 9.438 |
| 5134039 | 2-1/2 | 48.000 | .938 | 9.375 | 3.000 | 9.438 |
| 5134083 | 3 | 48.000 | .938 | 9.375 | 3.125 | 9.438 |
| 5133990 | 4 | 48.000 | .938 | 9.375 | 3.375 | 9.438 |
| 5133977 | 5 | 48.000 | .938 | 9.375 | 3.625 | 9.438 |
| 5134079 | 6 | 48.000 | .938 | 9.375 | 3.750 | 9.438 |
| 5133907 | 8 | 48.000 | .938 | 9.375 | 6.625 | 9.438 |

Dimensions are nominal

### Schedule 40 11-1/4° Elbow 60" Radius Plain End

| Part Number | Trade Size | "R" | "O" | "H' | "S" MIN | "L" |
|---|---|---|---|---|---|---|
| 5134084 | 3 | 60 | 1.125 | 11.688 | 3.125 | 11.750 |
| 5134157 | 4 | 60 | 1.125 | 11.688 | 3.375 | 11.750 |
| 5133978 | 5 | 60 | 1.125 | 11.688 | 3.625 | 11.750 |
| 5134080 | 6 | 60 | 1.125 | 11.688 | 3.750 | 11.750 |

Dimensions are nominal

**If you don't see the size you need, additional sizes of special radius elbows are available as non-stocked items. Call for specifications and quotes.**