ELLIOTT ELECTRIC SUPPLY
We Deliver...Lower Cost, Quality Products, & Personal Service
2310 N. Stallings Dr.
Nacogdoches, TX 75964-0
Phone: 9365697941
Fax: 9365604685



5233777 4" SCH40 45D 36"R PVC ELBOW BELL END

CANTEX,INC

Catalog Number	5233777
Manufacturer	CANTEX,INC
Description	CANTEX 5233777 is a 4 in. x 45-Degree x 36 in. Radius Bell End Schedule 40 Special Radius Elbow used to change the direction of a conduit run by 45-Degree
Weight per unit	7.1 (lbs/each)
Product Category	PVC Sch 40 Elbows

Dimensions and Weight

Size	4 in. x 45-Degree x 36 in. Radius Bell End Schedule 40 Special Radius Elbow

Descriptions

Description	4" SCH40 45D 36"R PVC ELBOW BELL END
Features	CANTEX 5233777 is a 4 in. x 45-Degree x 36 in. Radius Bell End Schedule 40 Special Radius Elbow used to change the direction of a conduit run by 45-Degree
Long Description	CANTEX 5233777 is a 4 in. x 45-Degree x 36 in. Radius Bell End Schedule 40 Special Radius Elbow used to change the direction of a conduit run by 45-Degree
Product Type	4 UL40 45 BND 36"RB
Extra Long Description	CTX 5233777 4 UL40 45 BND 36"RB

Manufacturer Information

Brand	PVC & Accessories
	CANTEX INC.
GTIN	00088700015616
Manufacturers Part Number	5233777
UPC	881780

Taxonomies, Classifications, and Categories

Category Description	PVC ELBOWS
Type	4 in. x 45-Degree x 36 in. Radius Bell End Schedule 40 Special Radius Elbow

Trade Size

Trade Size	4

Packaging

Carton	1
Weight Per Each	7.1 (lbs/each)

Schedule 40 Special Radius Elbows - Bell End

CANTEX

Additional sizes are available as non-stock items. Call for specifications and quotes.

Schedule 40 90° Elbow Special Radius - Bell End

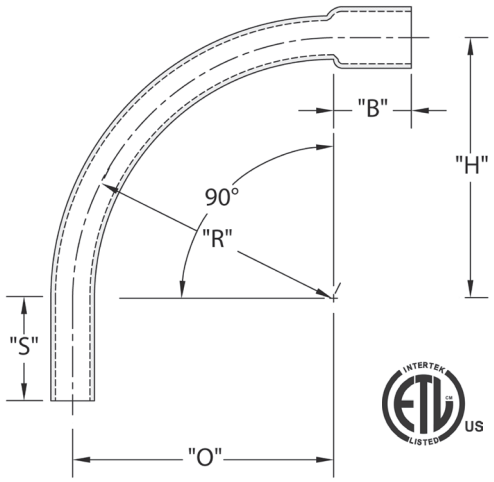

CANTEX Schedule 40 90-Degree Special Radius Belled End Elbows are used to change the direction of a conduit run by 90 degrees when special radiuses are needed.

- Schedule 40 PVC construction for strength and durability
- For indoor or outdoor use
- Suitable for aboveground or buried
- Bell end for easy installation
- ETL Listed
- Made in USA

Schedule 40 90° Elbow 18" Radius Bell End

Part Number	Trade Size	"R"	"O"	"H'	"S" MIN	"B" MIN	"L"
5233844	1	18.000	18.000	18.000	1.875	1.500	28.250
5233923	1-1/4	18.000	18.000	18.000	2.000	1.500	28.250
5233839	1-1/2	18.000	18.000	18.000	2.000	2.000	28.250
5233846	2	18.000	18.000	18.000	2.000	2.000	28.250
5233856	2-1/2	18.000	18.000	18.000	3.000	2.250	28.250
5233850	3	18.000	18.000	18.000	3.125	2.500	28.250
5233985	4	18.000	18.000	18.000	3.375	3.250	28.250

Dimensions are nominal

Schedule 40 90° Elbow 24" Radius Bell End

Part Number	Trade Size	"R"	"O"	"H'	"S" MIN	"B" MIN	"L"
5234099	3/4	24.000	24.000	24.000	1.500	1.500	37.688
5233859	1	24.000	24.000	24.000	1.875	1.500	37.688
5233883	1-1/4	24.000	24.000	24.000	2.000	1.500	37.688
5233873	1-1/2	24.000	24.000	24.000	2.000	2.000	37.688
5133924	2	24.000	24.000	24.000	2.000	2.000	37.688
5233847	2-1/2	24.000	24.000	24.000	3.000	2.250	37.688
5233837	3	24.000	24.000	24.000	3.125	2.500	37.688
5233893	3-1/2	24.000	24.000	24.000	3.250	3.250	37.688
5233822	4	24.000	24.000	24.000	3.375	3.250	37.688

Dimensions are nominal

Schedule 40 90° Elbow 30" Radius Bell End

Part Number	Trade Size	"R"	"O"	"H'	"S" MIN	"B" MIN	"L"
5233920	2	30.000	30.000	30.000	2.000	2.000	47.125
5233981	2-1/2	30.000	30.000	30.000	3.000	2.250	47.125
5234081	3	30.000	30.000	30.000	3.125	2.500	47.125
5233852	4	30.000	30.000	30.000	3.375	3.250	47.125
5233872	5	30.000	30.000	30.000	3.625	4.250	47.125

Dimensions are nominal

Schedule 40 90° Elbow 36" Radius Bell End

Part Number	Trade Size	"R"	"O"	"H'	"S" MIN	"B" MIN	"L"
5233855	1	36.000	36.000	36.000	1.875	1.500	56.500
5233884	1-1/4	36.000	36.000	36.000	2.000	1.500	56.500
5233866	1-1/2	36.000	36.000	36.000	2.000	2.000	56.500
5233848	2	36.000	36.000	36.000	2.000	2.000	56.500
5233857	2-1/2	36.000	36.000	36.000	3.000	2.250	56.500
5233930	3	36.000	36.000	36.000	3.125	2.500	56.500
5233818	3-1/2	36.000	36.000	36.000	3.250	3.250	56.500
5233842	4	36.000	36.000	36.000	3.375	3.250	56.500
5233841	5	36.000	36.000	36.000	3.625	4.250	56.500
5233877	6	36.000	36.000	36.000	3.750	5.000	56.500

Dimensions are nominal

Schedule 40 90° Elbow 48" Radius Bell End

Part Number	Trade Size	"R"	"O"	"H'	"S" MIN	"B" MIN	"L"
5236338	1	48.000	48.000	48.000	1.875	1.500	75.375
5234053	1-1/4	48.000	48.000	48.000	2.000	1.500	75.375
5233865	1-1/2	48.000	48.000	48.000	2.000	2.000	75.375
5233876	2	48.000	48.000	48.000	2.000	2.000	75.375
5233849	2-1/2	48.000	48.000	48.000	3.000	2.250	75.375
5233817	3	48.000	48.000	48.000	3.125	2.500	75.375
5233892	3-1/2	48.000	48.000	48.000	3.250	3.250	75.375
5233843	4	48.000	48.000	48.000	3.375	3.250	75.375
5233868	5	48.000	48.000	48.000	3.625	4.250	75.375
5233816	6	48.000	48.000	48.000	3.750	5.000	75.375

Dimensions are nominal

Schedule 40 90° Elbow 60" Radius Bell End

Part Number	Trade Size	"R"	"O"	"H'	"S" MIN	"B" MIN	"L"
5233786	2	60.000	60.000	60.000	2.000	2.000	94.250
5233819	3	60.000	60.000	60.000	3.125	2.500	94.250
5233854	4	60.000	60.000	60.000	3.375	3.250	94.250
5233885	5	60.000	60.000	60.000	3.625	4.250	94.250
5233886	6	60.000	60.000	60.000	3.750	5.000	94.250

Dimensions are nominal

Schedule 40 Special Radius Elbows - Bell End

CANTEX

Additional sizes are available as non-stock items. Call for specifications and quotes.

Schedule 40 45° Elbow Special Radius - Bell End

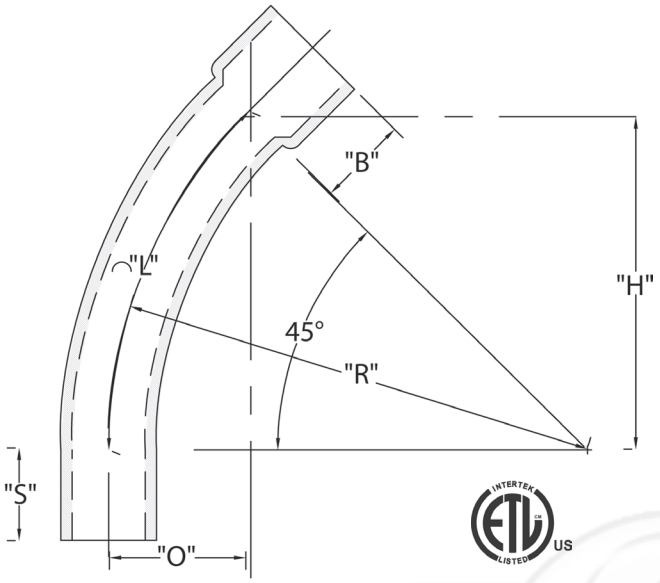

CANTEX Schedule 40 45-Degree Special Radius Belled End Elbows are used to change the direction of a conduit run by 45 degrees when special radiuses are needed.

- Schedule 40 PVC construction for strength and durability
- For indoor or outdoor use
- Suitable for aboveground or buried
- Bell end for easy installation
- ETL Listed
- Made in USA

Schedule 40 45° Elbow 18" Radius Bell End

Part Number	Trade Size	"R"	"O"	"H'	"S" MIN	"B" MIN	"L"
5234008	1	18.000	5.250	12.750	1.875	1.500	14.125
5233797	2	18.000	5.250	12.750	2.000	2.000	14.125
5233973	2-1/2	18.000	5.250	12.750	3.000	2.250	14.125
5233799	3	18.000	5.250	12.750	3.125	2.500	14.125

Dimensions are nominal

Schedule 40 45° Elbow 24" Radius Bell End

Part Number	Trade Size	"R"	"O"	"H'	"S" MIN	"B" MIN	"L"
5233878	1	24.000	7.00	17.000	1.875	1.500	18.875
5233941	1-1/4	24.000	7.00	17.000	2.000	1.500	18.875
5233874	1-1/2	24.000	7.00	17.000	2.000	2.000	18.875
5233815	2	24.000	7.00	17.000	2.000	2.000	18.875
5233935	2-1/2	24.000	7.00	17.000	3.000	2.250	18.875
5233800	3	24.000	7.00	17.000	3.125	2.500	18.875
5233802	3-1/2	24.000	7.00	17.000	3.250	3.250	18.875
5233812	4	24.000	7.00	17.000	3.375	3.250	18.875

Dimensions are nominal

Schedule 40 45° Elbow 30" Radius Bell End

Part Number	Trade Size	"R"	"O"	"H'	"S" MIN	"B" MIN	"L"
5233953	4	30.000	8.750	21.250	3.375	3.250	23.563

Dimensions are nominal

Schedule 40 45° Elbow 36" Radius Bell End

Part Number	Trade Size	"R"	"O"	"H'	"S" MIN	"B" MIN	"L"
5233919	1	36.000	10.500	25.438	1.875	1.500	28.250
5234083	1-1/2	36.000	10.500	25.438	2.000	2.000	28.250
5233778	2	36.000	10.500	25.438	2.000	2.000	28.250
5233801	2-1/2	36.00	10.500	25.438	3.000	2.250	28.250
5233779	3	36.000	10.500	25.438	3.125	2.500	28.250
5233939	3-1/2	36.000	10.500	25.438	3.250	3.250	28.250
5233777	4	36.000	10.500	25.438	3.375	3.250	28.250
5233780	5	36.000	10.500	25.438	3.625	4.250	28.250
5133894	6	36.000	10.500	25.438	3.750	5.000	28.250

Dimensions are nominal

Schedule 40 45° Elbow 48" Radius Bell End

Part Number	Trade Size	"R"	"O"	"H'	"S" MIN	"B" MIN	"L"
5233811	1-1/2	48.000	14.000	33.313	2.000	2.000	37.688
5133759	2	48.000	14.000	33.313	2.000	2.000	37.688
5233785	2-1/2	48.000	14.000	33.313	3.000	2.250	37.688
5233782	3	48.000	14.000	33.313	3.125	2.500	37.688
5133761	4	48.000	14.000	33.313	3.375	3.250	37.688
5233781	5	48.000	14.000	33.313	3.625	3.250	37.688
5233813	6	48.000	14.000	33.313	3.750	4.250	37.688
5233989D	8	48.000	14.000	33.938	6.625	5.000	37.688

Dimensions are nominal

Schedule 40 45° Elbow 60" Radius Bell End

Part Number	Trade Size	"R"	"O"	"H'	"S" MIN	"B" MIN	"L"
5233808	2	60.000	17.563	42.375	2.000	2.000	47.125
5233946	4	60.000	17.563	42.375	3.375	3.250	47.125
5233947	5	60.000	17.563	42.375	3.625	4.250	47.125
5233806	6	60.000	17.563	42.375	3.750	5.000	47.125

Dimensions are nominal

Schedule 40 Special Radius Elbows - Bell End

Additional sizes are available as non-stock items. Call for specifications and quotes.

Schedule 40 30° Elbow Special Radius - Bell End

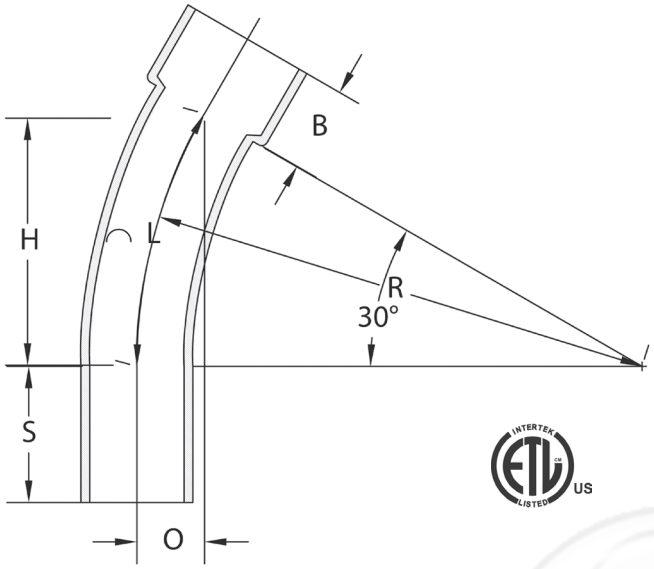

CANTEX Schedule 40 30-Degree Special Radius Belled End Elbows are used to change the direction of a conduit run by 30 degrees when special radiuses are needed.

- Schedule 40 PVC construction for strength and durability
- For indoor or outdoor use
- Suitable for aboveground or buried
- Bell end for easy installation
- ETL Listed
- Made in USA

Schedule 40 30° Elbow 18" Radius Bell End

Part Number	Trade Size	"R"	"O"	"H'	"S" MIN	"B" MIN	"L"
5233789	2	18.000	2.438	9.063	2.000	2.000	9.438
5233969	3	18.000	2.438	9.063	3.125	2.500	9.438

Dimensions are nominal

Schedule 40 30° Elbow 24" Radius Bell End

Part Number	Trade Size	"R"	"O"	"H'	"S" MIN	"B" MIN	"L"
5236435	1	24.000	3.188	12.000	1.875	1.500	12.563
5233803	1-1/2	24.000	3.188	12.000	2.000	2.000	12.563
5233796	2	24.000	3.188	12.000	2.000	2.000	12.563
5233958	3	24.000	3.188	12.000	3.125	2.500	12.563
5236439	3-1/2	24.000	3.188	12.000	3.250	3.250	12.563
5233788	4	24.000	3.188	12.000	3.375	3.250	12.563

Dimensions are nominal

Schedule 40 30° Elbow 30" Radius Bell End

Part Number	Trade Size	"R"	"O"	"H'	"S" MIN	"B" MIN	"L"
5233898	4	30.000	4.000	15.000	3.375	3.250	15.938

Dimensions are nominal

Schedule 40 30° Elbow 36" Radius Bell End

Part Number	Trade Size	"R"	"O"	"H'	"S" MIN	"B" MIN	"L"
5233792	2	36.000	4.813	18.000	2.000	2.000	18.875
5233793	3	36.000	4.813	18.000	3.125	2.500	18.875
5233790	4	36.000	4.813	18.000	3.375	3.250	18.875
5233933	5	36.000	4.813	18.000	3.625	4.250	18.875
5233791	6	36.000	4.813	18.000	3.750	5.000	18.875

Dimensions are nominal

Schedule 40 30° Elbow 48" Radius Bell End

Part Number	Trade Size	"R"	"O"	"H'	"S" MIN	"B" MIN	"L"
5233820	2	48.000	6.438	24.00	2.000	2.000	25.125
5233809	3	48.000	6.438	24.000	3.125	2.500	25.125
5233838	4	48.000	6.438	24.000	3.375	3.250	25.125
5233959	5	48.000	6.438	24.000	3.625	4.250	25.125
5233861	6	48.000	6.438	24.000	3.750	5.000	25.125

Dimensions are nominal

Schedule 40 30° Elbow 60" Radius Bell End

Part Number	Trade Size	"R"	"O"	"H'	"S" MIN	"B" MIN	"L"
5233999	4	60.000	8.063	30.000	3.375	3.250	31.438

Dimensions are nominal

If you don't see the size you need, additional sizes of special radius elbows are available as non-stocked items. Call for specifications and quotes.

Schedule 40 Special Radius Elbows - Bell End

CANTEX

Additional sizes are available as non-stock items. Call for specifications and quotes.

Schedule 40 22-1/2° Elbow Special Radius - Bell End

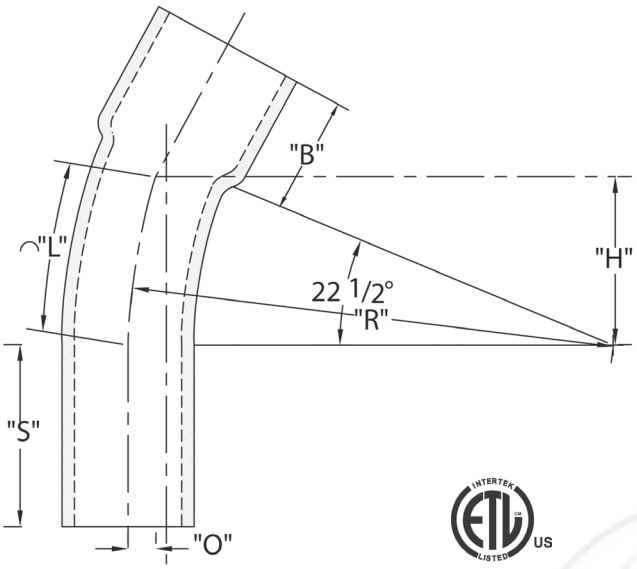

CANTEX Schedule 40 22-1/2 -Degree Special Radius Belled End Elbows are used to change the direction of a conduit run by 22-1/2 degrees when special radiuses are needed.

- Schedule 40 PVC construction for strength and durability
- For indoor or outdoor use
- Suitable for aboveground or buried
- Bell end for easy installation
- ETL Listed
- Made in USA

Schedule 40 22-1/2° Elbow 18" Radius Bell End

Part Number	Trade Size	"R"	"O"	"H"	"S" MIN	"B" MIN	"L"
5233902	1	18.000	1.375	6.875	1.875	1.500	7.063
5233908	1-1/2	18.000	1.375	6.875	2.000	2.000	7.063
5233639	2	18.000	1.375	6.875	2.000	2.000	7.063
5233936	2-1/2	18.000	1.375	6.875	3.000	2.250	7.063
5233845	3	18.000	1.375	6.875	3.125	2.500	7.063
5234016	4	18.000	1.375	6.875	3.375	3.250	7.063

Dimensions are nominal

Schedule 40 22-1/2° Elbow 24" Radius Bell End

Part Number	Trade Size	"R"	"O"	"H"	"S" MIN	"B" MIN	"L"
5236425	1-1/4	24.000	1.813	9.188	2.000	1.500	9.438
5233915	2	24.000	1.813	9.188	2.000	2.000	9.438
5234019	2-1/2	24.000	1.813	9.188	3.000	2.250	9.438
5233903	3	24.000	1.813	9.188	3.125	2.500	9.438
5233909	4	24.000	1.813	9.188	3.375	3.250	9.438
5233917	6	24.000	1.813	9.188	3.750	5.000	9.438

Dimensions are nominal

Schedule 40 22-1/2° Elbow 30" Radius Bell End

Part Number	Trade Size	"R"	"O"	"H"	"S" MIN	"B" MIN	"L"
5233810	2	30.000	2.250	11.500	2.000	2.000	11.750
5233821	3	30.000	2.250	11.500	3.125	2.500	11.750
5233948	4	30.000	2.250	11.500	3.375	3.250	11.750
5233900	5	30.000	2.250	11.500	3.625	4.250	11.750

Dimensions are nominal

Schedule 40 22-1/2° Elbow 36" Radius Bell End

Part Number	Trade Size	"R"	"O"	"H"	"S" MIN	"B" MIN	"L"
5233997	1-1/2	36.000	2.750	13.750	2.000	2.000	14.125
5233851	2	36.000	2.750	13.750	2.000	2.000	14.125
5233937	2-1/2	36.000	2.750	13.750	3.000	2.250	14.125
5233904	3	36.000	2.750	13.750	3.125	2.500	14.125
5233853	4	36.000	2.750	13.750	3.375	3.250	14.125
5133888	5	36.000	2.750	13.750	3.625	4.250	14.125
5233905	6	36.000	2.750	13.750	3.750	5.000	14.125

Dimensions are nominal

Schedule 40 22-1/2° Elbow 48" Radius Bell End

Part Number	Trade Size	"R"	"O"	"H"	"S" MIN	"B" MIN	"L"
5233995	1-1/4	48.000	3.625	18.375	2.000	1.500	18.875
5233984	2	48.000	3.625	18.375	2.000	2.000	18.875
5233907	3	48.000	3.625	18.375	3.125	2.500	18.875
5233932	4	48.000	3.625	18.375	3.375	3.250	18.875
5233931	5	48.000	3.625	18.375	3.625	4.250	18.875
5233862	6	48.000	3.625	18.375	3.750	5.000	18.875

Dimensions are nominal

Schedule 40 22-1/2° Elbow 60" Radius Bell End

Part Number	Trade Size	"R"	"O"	"H"	"S" MIN	"B" MIN	"L"
5234013	2	60.000	4.563	23.000	2.000	2.000	23.563
5233899	3	60.000	4.563	23.000	3.125	2.500	23.563
5234012	4	60.000	4.563	23.000	3.375	3.250	23.563
5233961	5	60.000	4.563	23.000	3.625	4.250	23.563
5234065	6	60.000	4.563	23.000	3.750	5.000	23.563

Dimensions are nominal

Schedule 40 Special Radius Elbows - Bell End

CANTEX

Additional sizes are available as non-stock items. Call for specifications and quotes.

Schedule 40 11-1/4° Elbow Special Radius - Bell End

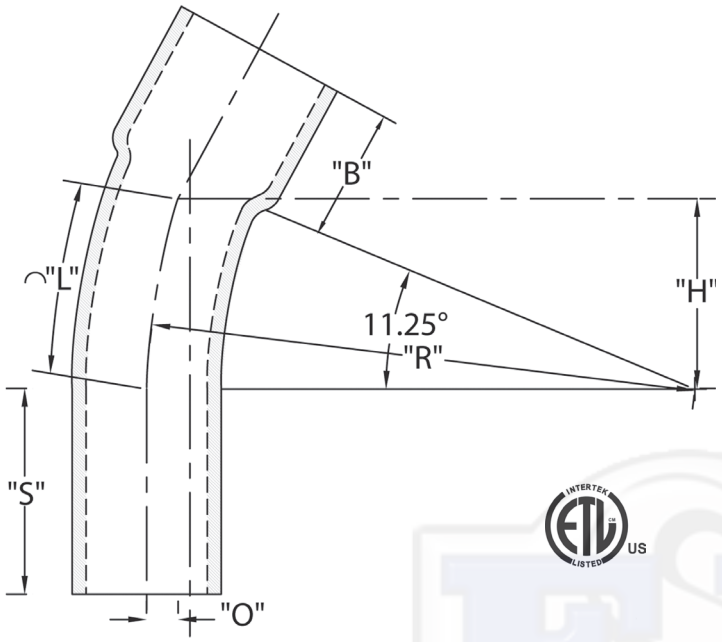

CANTEX Schedule 40 11 1/4 -Degree Special Radius Belled End Elbows are used to change the direction of a conduit run by 11-1/4 degrees when special radiuses are needed.

- Schedule 40 PVC construction for strength and durability
- For indoor or outdoor use
- Suitable for aboveground or buried
- Bell end for easy installation
- ETL Listed
- Made in USA

Schedule 40 11-1/4° Elbow 36" Radius Bell End

Part Number	Trade Size	"R"	"O"	"H"	"S" MIN	"B" MIN	"L"
5233963	2	36.000	.688	7.000	2.000	2.000	7.063
5234129	2-1/2	36.000	.688	7.000	3.000	2.250	7.063
5234082	3	36.000	.688	7.000	3.125	2.500	7.063
5233910	4	36.000	.688	7.000	3.375	3.250	7.063
5233914	5	36.000	.688	7.000	3.625	4.250	7.063
5233987	6	36.000	.688	7.000	3.750	5.000	7.063

Dimensions are nominal

Schedule 40 11-1/4° Elbow 24" Radius Bell End

Part Number	Trade Size	"R"	"O"	"H"	"S" MIN	"B" MIN	"L"
5233974	2	24.000	.469	4.688	2.000	2.000	4.719
5233991	4	24.000	.469	4.688	3.375	3.250	4.719
5233965	5	24.000	.469	4.688	3.625	4.250	4.719

Dimensions are nominal

Schedule 40 11-1/4° Elbow 48" Radius Bell End

Part Number	Trade Size	"R"	"O"	"H"	"S" MIN	"B" MIN	"L"
5233990	4	48.000	.938	9.375	3.375	3.250	9.438
5233977	5	48.000	.938	9.375	3.625	4.250	9.438
5134078	6	48.000	.938	9.375	3.750	5.000	9.438

Dimensions are nominal

Schedule 40 11-1/4° Elbow 30" Radius Bell End

Part Number	Trade Size	"R"	"O"	"H"	"S" MIN	"B" MIN	"L"
5233988	6	30.000	.563	5.875	3.750	5.000	5.875

Dimensions are nominal

Schedule 40 11-1/4° Elbow 150" Radius Bell End

Part Number	Trade Size	"R"	"O"	"H"	"S" MIN	"B" MIN	"L"
5233911	2	150.000	2.875	29.250	2.000	2.000	29.438
5234047	3	150.000	2.875	29.250	3.125	2.500	29.438
5233912	4	150.000	2.875	29.250	3.375	3.250	29.438
5234122	5	150.000	2.875	29.250	3.625	4.250	29.438
5234048	6	150.000	2.875	29.250	3.750	5.000	29.438

Dimensions are nominal

If you don't see the size you need, additional sizes of special radius elbows are available as non-stocked items. Call for specifications and quotes.