ELLIOTT ELECTRIC SUPPLY
We Deliver...Lower Cost, Quality Products, & Personal Service
2310 N. Stallings Dr.
Nacogdoches, TX 75964-0
Phone: 9365697941
Fax: 9365604685



5234068 3" SCH40 22-1/2D PVC ELBOW BELL END

CANTEX,INC

Catalog Number	5234068
Manufacturer	CANTEX,INC
Description	CANTEX 5234068 is a 3 in. x 22-1/2-Degree Bell End Schedule 40 Standard Radius Elbow used to change the direction of a conduit run by 22-1/2-Degree
Weight per unit	2.0 (lbs/each)
Product Category	PVC Sch 40 Elbows

Dimensions and Weight

Size	3 in. x 22-1/2-Degree Bell End Schedule 40 Standard Radius Elbow

Descriptions

Description	3" SCH40 22-1/2D PVC ELBOW BELL END
Features	CANTEX 5234068 is a 3 in. x 22-1/2-Degree Bell End Schedule 40 Standard Radius Elbow used to change the direction of a conduit run by 22-1/2-Degree
Long Description	CANTEX 5234068 is a 3 in. x 22-1/2-Degree Bell End Schedule 40 Standard Radius Elbow used to change the direction of a conduit run by 22-1/2-Degree
Product Type	3 UL40 22 1/2BND STD RB
Extra Long Description	CTX 5234068 3 UL40 22 1/2BND STD RB

Manufacturer Information

Brand	PVC & Accessories
	CANTEX INC.
GTIN	00088700022102
Manufacturers Part Number	5234068
UPC	881780

Taxonomies, Classifications, and Categories

Category Description	PVC ELBOWS
Type	3 in. x 22-1/2-Degree Bell End Schedule 40 Standard Radius Elbow

Trade Size

Trade Size	3

Packaging

Carton	8
Weight Per Each	2.0 (lbs/each)

Schedule 40 Standard Radius Elbows - Bell End

CANTEX

Schedule 40 90° Elbow - Bell End

Part Number	Trade Size	Carton Qty.	"R"	"O"	"H'	"S" MIN	"B" MIN	"L"
5233823	1/2	50	4.000	4.000	4.000	1.500	1.000	6.250
5233824	3/4	35	4.500	4.500	4.500	1.500	1.500	7.125
5233825	1	20	5.750	5.75	5.75	1.875	1.500	9.000
5233826	1-1/4	30	7.250	7.250	7.250	2.000	1.500	11.375
5233827	1-1/2	30	8.250	8.250	8.250	2.000	2.000	13.000
5233828	2	15	9.500	9.500	9.500	2.000	2.000	15.000
5233829	2-1/2	18	10.500	10.500	10.500	3.000	2.250	16.500
5233830	3	14	13.000	13.000	13.000	3.125	2.500	20.375
5233831	3-1/2	12	15.000	15.000	15.000	3.250	3.250	23.500
5233832	4	10	16.000	16.000	16.000	3.375	3.250	25.125
5233835	5	30*	24.000	24.000	24.000	3.625	4.250	37.625
5233834	6	25*	30.000	30.000	30.000	3.750	5.000	47.125

* Pallet Quantity

Dimensions are nominal

Conforms to UL651 and NEMA TC3
Material is Rigid PVC
Bend Tolerance is ±2°

CANTEX 90-Degree Bell End Schedule 40 Standard Radius Elbows are used to change the direction of a conduit run by 90 degrees.



- Schedule 40 PVC construction for strength and durability
- For indoor or outdoor use
- Suitable for aboveground or buried
- Bell end for easy installation
- ETL Listed
- Made in USA

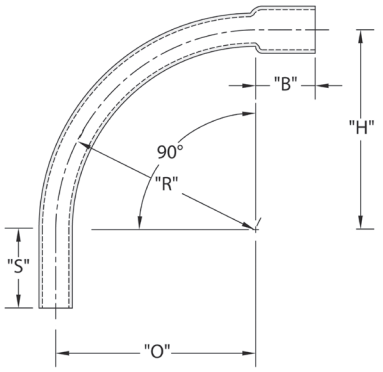

Schedule 40 45° Elbow - Bell End

Part Number	Trade Size	Carton Qty.	"R"	"O"	"H'	"S" MIN	"B" MIN	"L"
5233763	1/2	50	4.000	1.188	2.813	1.500	1.000	3.125
5233764	3/4	25	4.500	1.313	3.188	1.500	1.500	3.500
5233765	1	20	5.750	1.688	4.063	1.875	1.500	4.500
5233766	1-1/4	25	7.250	2.125	5.125	2.000	1.500	5.688
5233767	1-1/2	25	8.250	2.438	5.813	2.000	2.000	6.500
5233768	2	10	9.500	2.813	6.750	2.000	2.000	7.500
5233769	2-1/2	20	10.500	3.063	7.438	3.000	2.250	8.250
5233770	3	8	13.000	3.813	9.188	3.500	2.500	10.188
5233771	3-1/2	5	15.000	4.375	10.625	3.250	3.250	11.813
5233772	4	20	16.000	4.688	11.188	3.375	3.250	12.563
5233773	5	30*	24.000	7.000	17.000	3.625	4.250	18.875
5233774	6	25*	30.000	8.875	21.250	3.750	5.000	23.563

* Pallet Quantity

Dimensions are nominal

Conforms to UL651 and NEMA TC3
Material is Rigid PVC
Bend Tolerance is ±2°

CANTEX 45-Degree Bell End Schedule 40 Standard Radius Elbows are used to change the direction of a conduit run by 45 degrees.



- Schedule 40 PVC construction for strength and durability
- For indoor or outdoor use
- Suitable for aboveground or buried
- Bell end for easy installation
- ETL Listed
- Made in USA

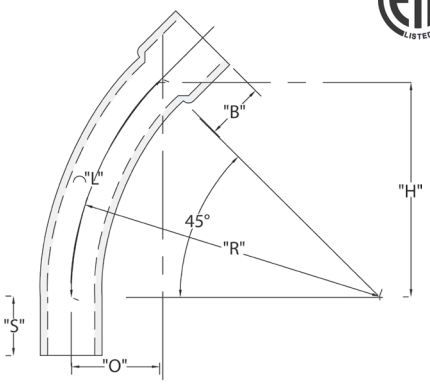

Schedule 40 Standard Radius Elbows - Bell End

CANTEX

Schedule 40 30° Elbow - Bell End



CANTEX 30-Degree Bell End Schedule 40 Standard Radius Elbows are used to change the direction of a conduit run by 30 degrees.

- Schedule 40 PVC construction for strength and durability
- For indoor or outdoor use
- Suitable for aboveground or buried
- Bell end for easy installation
- ETL Listed
- Made in USA

Part Number	Trade Size	Carton Qty.	"R"	"O"	"H'	"S" MIN	"B" MIN	"L"
5233748	2	10	9.500	1.250	4.750	2.000	2.000	5.000
5233750	3	8	13.000	1.750	6.500	3.125	2.500	6.813
5233751	3-1/2	5	15.000	2.000	7.563	3.250	3.250	7.875
5233776	4	20	16.000	2.063	8.000	3.375	3.250	8.375
5233753	5	30*	24.000	3.188	12.000	3.625	4.250	12.563
5233754	6	50*	30.000	4.000	15.000	3.750	5.00	15.688

* Pallet Quantity

Dimensions are nominal

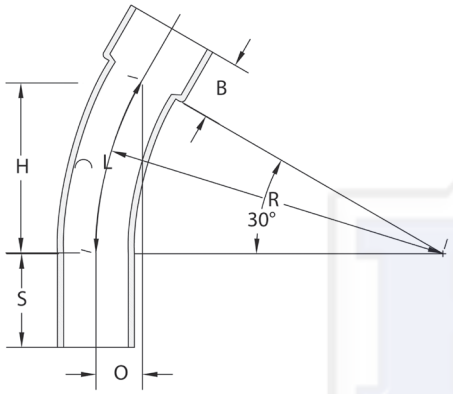

Additional sizes are available. Call for information.

Conforms to UL651 and NEMA TC3
Material is Rigid PVC
Bend Tolerance is ±2°

Schedule 40 22-1/2° Elbow - Bell End



CANTEX 22-1/2-Degree Bell End Schedule 40 Standard Radius Elbows are used to change the direction of a conduit run by 22-1/2 degrees.

- Schedule 40 PVC construction for strength and durability
- For indoor or outdoor use
- Suitable for aboveground or buried
- Bell end for easy installation
- ETL Listed
- Made in USA

Part Number	Trade Size	Carton Qty.	"R"	"O"	"H'	"S" MIN	"B" MIN	"L"
5234097	3/4	25	4.500	.375	1.750	1.500	1.500	1.750
5236402	1	20	5.750	.313	2.188	1.875	1.500	2.250
5236403	1-1/4	25	7.250	.563	2.750	2.000	1.500	2.875
5234094	1-1/2	20	8.250	.625	3.125	2.000	2.000	3.250
5234067	2	10	9.500	.750	3.625	2.000	2.000	3.750
5234096	2-1/2	10	10.500	.813	4.000	3.000	2.250	4.125
5234068	3	8	13.000	1.000	5.000	3.125	2.500	5.125
5234095	3-1/2	5	15.000	1.125	5.750	3.250	3.250	5.875
5233867	4	20	16.000	1.250	6.125	3.375	3.250	6.250
5234037	5	60*	24.000	1.813	9.188	3.625	4.250	9.375
5233901	6	50*	30.000	2.250	11.500	3.750	5.000	11.750

* Pallet Quantity

Dimensions are nominal

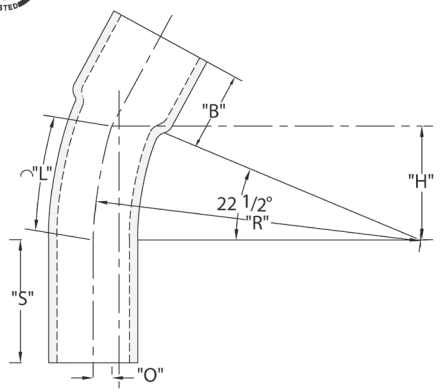

Conforms to UL651 and NEMA TC3
Material is Rigid PVC
Bend Tolerance is ±2°