Elliott Electric Supply

We Deliver...Lower Cost, Quality Products, & Personal Service

2310 N. Stallings Dr.
Nacogdoches, TX 75964-0
Phone: 9365697941
Fax: 9365604685



803ELL45 3" SCH80 45D PVC ELBOW

CANTEX,INC

Catalog Number	803ELL45
Manufacturer	CANTEX,INC
Description	CANTEX 5121010 is a 3 in. x 45-Degree Plain End Schedule 80 Standard Radius Elbow used to change the direction of a conduit run by 45-Degree
Weight per unit	2.7 (lbs/each)
Product Category	PVC Sch 80 Elbows

Dimensions and Weight

Size	3 in. x 45-Degree Plain End Schedule 80 Standard Radius Elbow

Descriptions

Also Known As...	Sweep Elbow Pre-Fab
Description	3" SCH80 45D PVC ELBOW
Features	CANTEX 5121010 is a 3 in. x 45-Degree Plain End Schedule 80 Standard Radius Elbow used to change the direction of a conduit run by 45-Degree
Long Description	CANTEX 5121010 is a 3 in. x 45-Degree Plain End Schedule 80 Standard Radius Elbow used to change the direction of a conduit run by 45-Degree
Product Type	3 UL80 45 BND STD R
Extra Long Description	CTX 5121010 3 UL80 45 BND STD R

Manufacturer Information

Brand	PVC & Accessories CANTEX INC.
GTIN	00088700507081
Manufacturers Part Number	5121010
UPC	881780

Taxonomies, Classifications, and Categories

Category Description	PVC ELBOWS
Type	3 in. x 45-Degree Plain End Schedule 80 Standard Radius Elbow

Trade Size

Trade Size	3

Packaging

Carton	1
Package	8
Weight Per Each	2.7 (lbs/each)

Schedule 80 Standard Radius Elbows - Plain End

CANTEX

Schedule 80 Standard Radius 90° Elbow - Plain End



CANTEX 90-Degree Plain End Schedule 80 Standard Radius Elbows are used to change the direction of a conduit run by 90 degrees.

- Schedule 80 Extra Heavy Wall Nonmetallic PVC construction for strength and durability
- For indoor or outdoor use
- Suitable for abo-veground or buried
- Plain end connections are solvent weld
- ETL Listed
- Made in USA

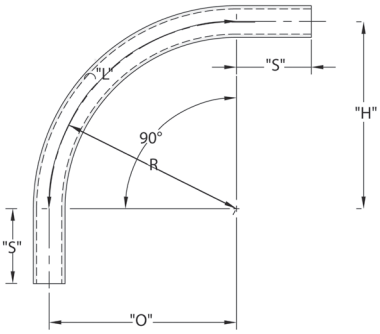

Part Number	Trade Size	Carton Qty.	"R"	"O"	"H'	"S" MIN	"L"
5121053	1/2	50	4.000	4.000	4.000	1.500	6.250
5121054	3/4	35	4.500	4.500	4.500	1.500	7.125
5121055	1	20	5.750	5.750	5.750	1.875	9.000
5121056	1-1/4	30	7.250	7.250	7.250	2.000	11.375
5121057	1-1/2	30	8.250	8.250	8.250	2.000	13.000
5121058	2	15	9.500	9.500	9.500	2.000	15.000
5121059	2-1/2	18	10.500	10.500	10.500	3.000	16.500
5121060	3	14	13.000	13.000	13.000	3.125	20.375
5121068	3-1/2	12	15.000	15.000	15.000	3.250	23.500
5121061	4	10	16.000	16.000	16.000	3.375	25.125
5121062	5	30*	24.000	24.000	24.000	3.625	37.625
5121063	6	25*	30.000	30.000	30.000	3.750	47.125

* Pallet Quantity

Dimensions are nominal

Conforms to UL651 and NEMA TC3
Material is Rigid PVC
Bend Tolerance is ±2°

Schedule 80 Standard Radius 45° Elbow - Plain End



CANTEX 45-Degree Plain End Schedule 80 Standard Radius Elbows are used to change the direction of a conduit run by 45 degrees.

- Schedule 80 Extra Heavy Wall Nonmetallic PVC construction for strength and durability
- For indoor or outdoor use
- Suitable for aboveground or buried
- Plain end connections are solvent weld
- ETL Listed
- Made in USA

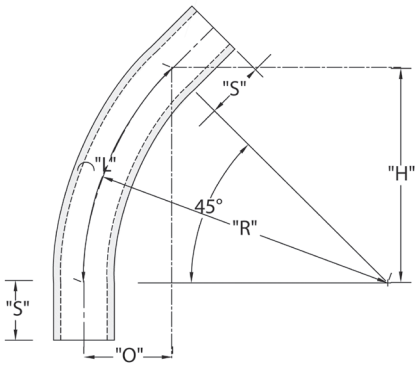

Part Number	Trade Size	Carton Qty.	"R"	"O"	"H"	"S" MIN	"L"
5121003	1/2	50	4.000	1.188	2.875	1.500	3.125
5121004	3/4	25	4.500	1.313	3.188	1.500	3.500
5121005	1	20	5.750	1.688	4.000	1.875	4.500
5121006	1-1/4	25	7.250	2.125	5.125	2.000	5.688
5121007	1-1/2	20	8.250	2.375	5.875	2.000	6.500
5121008	2	10	9.500	2.813	6.750	2.000	7.500
5121009	2-1/2	20	10.500	2.563	7.375	3.000	8.250
5121010	3	8	13.000	3.813	9.188	3.125	10.250
5121011	4	20	16.000	4.688	11.438	3.375	12.625
5121012	5	30*	24.00	7.000	17.000	3.625	18.875
5121013	6	25*	30.000	8.813	21.250	3.750	23.875

* Pallet Quantity

Dimensions are nominal

Conforms to UL651 and NEMA TC3
Material is Rigid PVC
Bend Tolerance is ±2°

Schedule 80 Standard Radius Elbows - Plain End

CANTEX

Schedule 80 Standard Radius 30° Elbow - Plain End

Part Number	Trade Size	Carton Qty.	"R"	"O"	"H'	"S" MIN	"L"
5121000	1/2	50	4.000	.500	2.000	1.500	2.125
5121001	3/4	25	4.500	.625	2.250	1.500	2.375
5121002	1	20	5.750	.750	2.875	1.875	3.000
5121106	1-1/4	25	7.250	1.000	3.625	2.000	3.813
5121850	1-1/2	20	8.250	1.063	4.125	2.000	4.313
5121108	2	10	9.500	1.250	4.750	2.000	5.000
5121109	2-1/2	20	10.500	1.438	5.250	3.000	5.500
5121110	3	8	13.000	1.750	6.500	3.125	6.813
5121111	4	20	16.000	2.063	8.000	3.375	8.375
5121112	5	30*	24.000	3.188	12.000	3.625	12.563
5121113	6	25*	30.000	4.000	15.000	3.750	15.688

* Pallet Quantity

Dimensions are nominal

Conforms to UL651 and NEMA TC3
Material is Rigid PVC
Bend Tolerance is ±2°

CANTEX 30-Degree Plain End Schedule 80 Standard Radius Elbows are used to change the direction of a conduit run by 30 degrees.



- Schedule 80 Extra Heavy Wall Nonmetallic PVC construction for strength and durability
- For indoor or outdoor use
- Suitable for aboveground or buried
- Plain end connections are solvent weld
- ETL Listed
- Made in USA

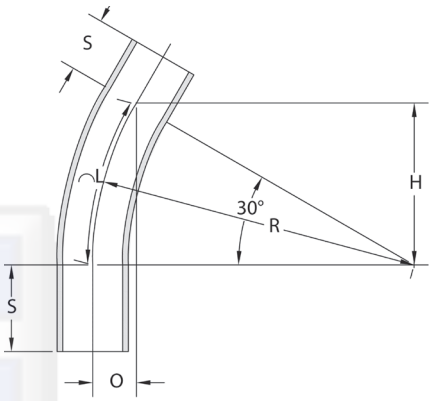

Schedule 80 Standard Radius 22-1/2° Elbow - Plain End

Part Number	Trade Size	Carton Qty.	"R"	"O"	"H'	"S" MIN	"L"
5136649	1-1/2	25	8.250	.625	3.125	2.000	3.250
5136659	2	10	9.500	.750	3.625	2.000	3.750
5136669	2-1/2	20	10.500	.813	4.000	3.000	4.125
5136679	3	8	13.000	1.000	5.000	3.125	5.125
5121868	4	20	16.000	1.250	6.125	3.375	6.250
5121125	5	*60	24.000	1.813	9.188	3.625	9.375

* Pallet Quantity

Dimensions are nominal

Conforms to UL651 and NEMA TC3
Material is Rigid PVC
Bend Tolerance is ±2°

CANTEX 22 1/2-Degree Plain End Schedule 80 Standard Radius Elbows are used to change the direction of a conduit run by 22-1/2 degrees.



- Schedule 80 Extra Heavy Wall Nonmetallic PVC construction for strength and durability
- For indoor or outdoor use
- Suitable for aboveground or buried
- Plain end connections are solvent weld
- ETL Listed
- Made in USA

