ELLIOTT ELECTRIC SUPPLY
We Deliver...Lower Cost, Quality Products, & Personal Service
2310 N. Stallings Dr.
Nacogdoches, TX 75964-0
Phone: 9365697941
Fax: 9365604685



E977HC 1-1/2" 2H PVC COND CLAMP

ABB INSTALLATION PRODUCTS, INC

Catalog Number	E977HC
Manufacturer	ABB INSTALLATION PRODUCTS, INC
Description	Clamp, 1-1/2 in Trade Size, 3.44 in Length, 0.70 in Width, 2.12 in Height, Gray, 0.03 lb/EA
Weight per unit	0.0300 (lbs/each)
Product Category	PVC Clamps, Straps, Exp Cplgs

Features

Material	Non-Metallic

Dimensions and Weight

Size	1-1/2

Descriptions

Description	1-1/2" 2H PVC COND CLAMP
Long Description	Conduit Clamp, Size 1-1/2 Inch, Length 3.44 Inches, Width 0.70 Inches, Height 2.12 Inches, Material PVC, Color Gray, Pack of 50
Product Type	1-1/2 Inch PVC Conduit Clamp
Extra Long Description	TB E977HC 1-1/2 INCH PVC CONDUIT CL

Manufacturer Information

Brand	Carlon
	ABB - Installation Products
GTIN	00034481069454
UPC	786210

Taxonomies, Classifications, and Categories

Category Description	PVC STRAPS
Type	Conduit Clamps & Support Straps

Packaging

Carton	50
Weight Per Each	0.0300 (lbs/each)

Uses, Certifications, and Standards

Application	UV inhibited for use in direct sunlight

Carlon®

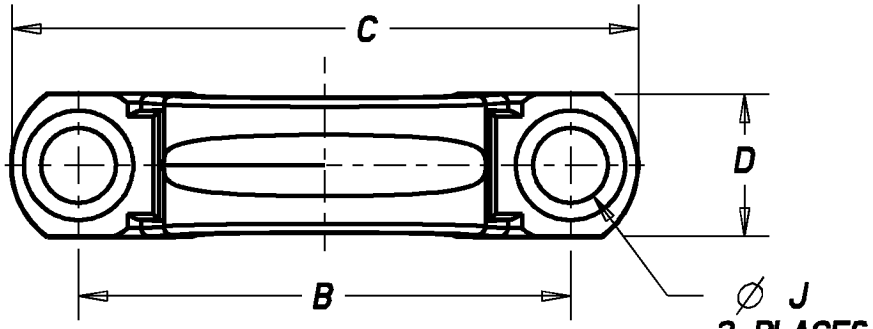

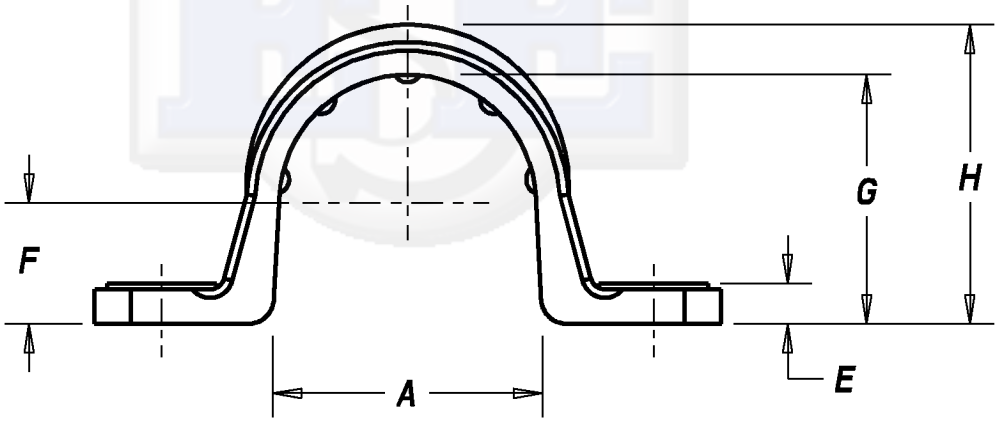

NOTES:
1. MATERIAL: GRAY PVC
2. MATERIAL: ORANGE PVC

GENERAL NOTES				
1. ALL DIMENSIONS ARE FOR REFERENCE ONLY. 2. DIMENSIONS IN BRACKETS [ ] ARE IN METRIC UNITS.	Thomas&Betts www.tnb.com			
REVISIONS	DESCRIPTION: CONDUIT CLAMPS			
** SEE ERN (****) FOR APPROVAL SIGNATURES & RELEASE DATE. PROJECT NO: ****	ORIGINAL PROJECT NO / (ERN NO) / ( )	SHEET NO: 1 OF 2	REV. NO: C	DRAWING NO: WSD-AC03405

THIS DRAWING IS INTENDED FOR DESCRIPTIVE PURPOSES ONLY. AND THE RIGHT IS RESERVED TO DEVIATE FROM ANY OF THE DETAILS SHOWN HEREON.
©2008 Thomas & Betts - Proprietary, All Rights Reserved

Carlon®

NOMINAL SIZE	PART NO. SEE NOTE 1	PART NO. SEE NOTE 2	A	B	C	D	E	F	G	H	ØJ
1/2"	E977DC E977DC25CL E977DC25L E977DC25-UPC E977DC-CTN E977DCL E977DCW	--	.892 (22.6)	1.71 (43.4)	2.16 (54.8)	.50 (12.7)	.14 (3.5)	.42 (10.6)	.866 (21.9)	1.04 (26.4)	.260 (6.6)
3/4"	E977EC E977EC20L E977EC20-UPC E977EC-CTN E977ECL	SCE977ECX	1.102 (27.9)	1.97 (50.0)	2.40 (60.9)	.50 (12.7)	.14 (3.5)	.525 (13.3)	1.076 (27.3)	1.255 (31.8)	.260 (6.6)
1"	E977FC E977FC-CTN E977FCL	SCE977FCX	1.39 (35.3)	2.25 (57.1)	2.81 (71.3)	.594 (15.0)	.14 (3.5)	.658 (16.7)	1.342 (34.0)	1.574 (39.9)	.260 (6.6)
1-1/4"	E977GC E977GC-CTN E977GCL	SCE977GCX	1.714 (43.5)	2.68 (68.0)	3.28 (83.3)	.64 (16.2)	.15 (3.8)	.83 (21.0)	1.687 (42.8)	1.89 (48.0)	.320 (8.1)
1-1/2"	E977HC E977HC-CTN E977HCL	SCE977HCX	1.92 (48.7)	2.82 (71.6)	3.44 (87.3)	.70 (17.7)	.15 (3.8)	.97 (24.6)	1.93 (49.0)	2.12 (53.8)	.312 (7.9)
2"	E977JC E977JCRCL E977JCR-CTN E977JCRL	SCE977JCX	2.54 (64.5)	3.54 (89.9)	4.18 (106.1)	.76 (19.3)	.16 (4.0)	1.05 (26.6)	2.29 (58.1)	2.49 (63.2)	.315 (8.0)

NOTES:
1. MATERIAL: GRAY PVC
2. MATERIAL: ORANGE PVC

Thomas&Betts
www.tnb.com

DESCRIPTION: CONDUIT CLAMPS

SHEET NO:	REV. NO:	DRAWING NO:
2 OF 2	C	WSD-AC03405

THIS DRAWING IS INTENDED FOR DESCRIPTIVE PURPOSES ONLY. AND THE RIGHT IS RESERVED TO DEVIATE FROM ANY OF THE DETAILS SHOWN HEREON.
©2008 Thomas & Betts - Proprietary, All Rights Reserved