ELLIOTT ELECTRIC SUPPLY
We Deliver...Lower Cost, Quality Products, & Personal Service
2310 N. Stallings Dr.
Nacogdoches, TX 75964-0
Phone: 9365697941
Fax: 9365604685



E984GCAR 1-1/4" PVC TYPE LL CONDULET

ABB INSTALLATION PRODUCTS, INC

Catalog Number	E984GCAR
Manufacturer	ABB INSTALLATION PRODUCTS, INC
Description	Type LL Conduit Body, Volume 32 Cubic Inches, Size 1-1/4 Inch, Length 7-31/32 Inches, Material PVC, Color Gray, For use with Schedule 40 and 80 Conduit, Pack of 5
Weight per unit	0.9100 (lbs/each)
Product Category	PVC Bodies & Boxes

Material, Color, and Finish

Color	Gray

Dimensions and Weight

Hub Size	1-1/4
Length	7-31/32

Descriptions

Description	1-1/4" PVC TYPE LL CONDULET
Long Description	Type LL Conduit Body, Volume 32 Cubic Inches, Size 1-1/4 Inch, Length 7-31/32 Inches, Material PVC, Color Gray, For use with Schedule 40 and 80 Conduit, Pack of 5
Product Type	LL-Cond Bdy 32CU 1.25IN Gry PVC 5PK
Special Features	Textured lids
Extra Long Description	TB E984G-CAR LL-COND BDY 32CU 1.25I

Manufacturer Information

Brand	Carlon
	ABB - Installation Products
GTIN	00034481132394
Manufacturers Part Number	E984G-CAR
	E984G
UPC	786210

Taxonomies, Classifications, and Categories

Category Description	PVC CONDULETS
Type	Type LL Conduit Body

Availability

Status	Inactive

Packaging

Carton	5
Weight Per Each	0.9100 (lbs/each)

2310 N. Stallings Dr.
Nacogdoches, TX 75964-0
Phone: 9365697941
Fax: 9365604685

Uses, Certifications, and Standards

Application	For use with Schedule 40 and 80 Conduit
Standard	UL E11461

Carlon®

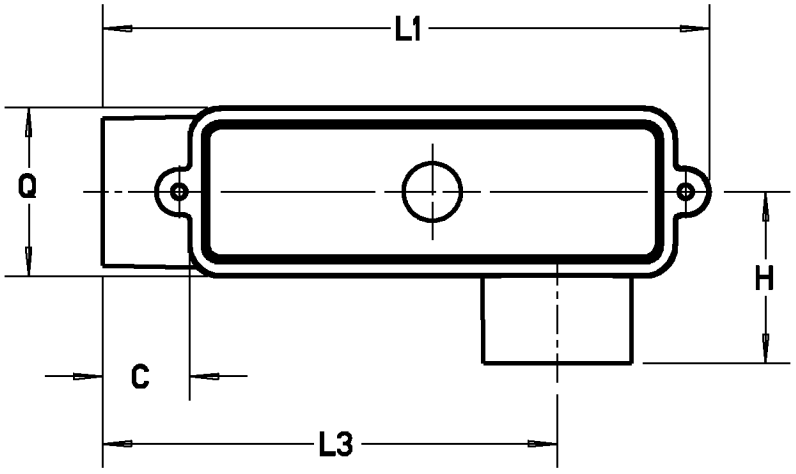

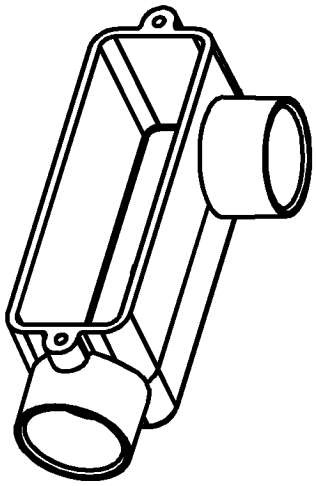

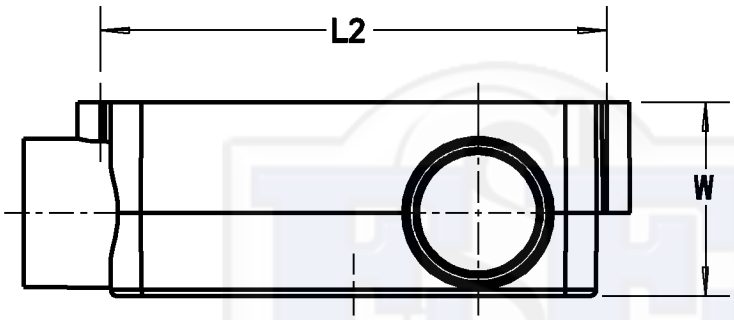

PART NO.	SIZE	C	L1	L2	L3	H	Q	W	CU. IN. VOL.
E984D-CAR E984DCL E984D-CTN E984DL	1/2"	.68 [17.3]	4.31 [109.5]	3.22 81.8]	3.06 [77.7]	1.31 [33.3]	1.34 [33.3]	1.50 [38.1]	4.0
E984E E984E-CAR E984E-CTN E984EL	3/4"	.91 [23.1]	6.28 [159.8]	5.28 [134.1]	4.78 [121.4]	1.78 [45.2]	1.75 [44.5]	2.03 [51.6]	12.0
E984F-CAR E984FL	1"	.91 [23.1]	6.28 [159.8]	5.28 [134.1]	4.78 [121.4]	1.78 [45.2]	1.75 [44.5]	2.03 [51.6]	12.0
E984G E984G-CAR	1-1/4"	1.09 [27.7]	7.97 [202.4]	6.41 [162.8]	6.00 [152.4]	2.31 [58.7]	2.50 [63.5]	2.75 [69.9]	32.0
E984H E984H-CAR	1-1/2"	1.09 [27.7]	7.97 [202.4]	6.41 [162.8]	6.00 [152.4]	2.31 [58.7]	2.50 [63.5]	2.75 [69.9]	32.0
E984J E984J-CAR	2"	1.16 [29.5]	9.16 [232.7]	8.41 [213.6]	7.25 [184.2]	2.56 [65.0]	3.16 [80.3]	3.47 [88.1]	63.0

GENERAL NOTES

1. ALL DIMENSIONS ARE FOR REFERENCE ONLY.
2. DIMENSIONS IN BRACKETS [ ] ARE IN METRIC UNITS.

REVISIONS

** SEE ERN (****) FOR APPROVAL SIGNATURES & RELEASE DATE. PROJECT NO: ****

Thomas&Betts
www.tnb.com

DESCRIPTION: **ACCESS FITTING - TYPE "LL"**

ORIGINAL PROJECT NO / (ERN NO)	SHEET NO:	REV. NO:	DRAWING NO:
/ ( )	1 OF 1	A	WSD-AC04745

THIS DRAWING IS INTENDED FOR DESCRIPTIVE PURPOSES ONLY. AND THE RIGHT IS RESERVED TO DEVIATE FROM ANY OF THE DETAILS SHOWN HEREON.
©2008 Thomas & Betts - Proprietary, All Rights Reserved