| Catalog Number |
|---|
| Notes |
| Type |

Contractor Select™

# EAX1/EAX2 LED

## Area Luminaire

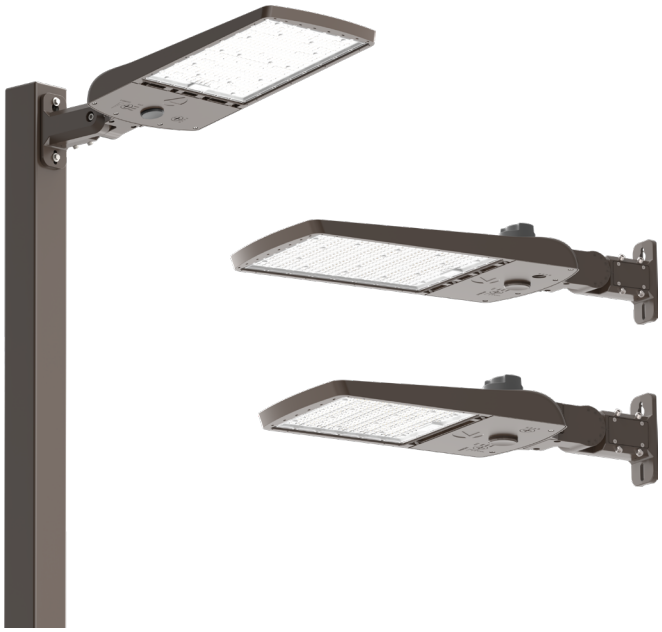

The EAX provides the best combination of switchable technology including adjustable lumens, switchable CCT color temperature and exclusive four-optic SwitchOptics™ providing Type II, III, IV and V distribution patterns; all from the same luminaire. This vast feature-set allows maximum versatility while managing the lowest possible SKUs required for site and pole mount lighting.

### FEATURES:

- EAX1 provides 5,000 to 16,000 lumens (50-250W and 400W replacement)
- EAX2 provides 18,000 to 30,000 lumens (400W to 1000W replacement)
- Each luminaire provides over 60 in-field configurations with the broadest array of switchable technology combined with (UPM) universal mounting.
- Easy access switching features Adjustable light output (ALO), switchable CCT (SWW2) and switchable optics (SO) including Type II, III, IV and V distributions.
- UPM universal pole mount with tilt for round and square poles, includes 2 3/8" built in pole top tenon fitter. (fits 3.5" min SQ and 3" min dia. RND side mount, 2 3/8" OD pole top tenon)
- All luminaires are sensor-ready and include a PER 3-pin NEMA twistlock photocell recpetacle with shorting cap and Acuity twist-to-lock sensor receptacle.

| Catalog | Lumens *(set on max) | Watts *(set on max) | CCT *(set on 40K) | Optics *(set on T3) | Voltage | Mounting Type | Finish | CI Code | UPC | Pallet Qty |
|---|---|---|---|---|---|---|---|---|---|---|
| EAX1 ALO SWW2 SO UVOLT UPM PER DDB | 5,000 -16,000 | 32 - 106 | 30K/40K/50K | T2, T3, T4, T5 | 120-347V | UPM ships included | Dark Bronze | *292P6U | 00198934597748 | 21 |
| EAX2 ALO SWW2 SO UVOLT UPM PER DDB | 18,000 - 30,000 | 112 - 213 | 30K/40K/50K | T2, T3, T4, T5 | 120-347V | UPM ships included | Dark Bronze | *292P7G | 00198934597946 | 24 |

Note: Not all EAX configurations or options are included in the Contractor Select program. More configurations are available. Visit www.acuitybrands.com.

**Accessories:** *Order as separate catalog number.*

| Catalog | Description | Finish | CI Code | UPC | Pallet Qty |
|---|---|---|---|---|---|
| EAX UPM DDB M6 | Universal tilt arm square/round & pole top tenon mount | Dark Bronze | *292P92 | 00198934598424 | 240 |
| EAX SRA DDB M6 | Standard square and round pole arm | Dark Bronze | *292P95 | 00198934598431 | 240 |
| EAX IS DDB M6 | Adjustable slipfitter | Dark Bronze | *292P9E | 00198934598530 | 360 |
| EAX ASRP DDB M6 | Adjustable tilt square and round pole arm | Dark Bronze | *292P9G | 00198934598547 | 270 |
| EAX WBA DDB M6 | Wall bracket adapter | Dark Bronze | *292P9H | 00198934598554 | 270 |
| EAX YK DDB M6 | Adjustable yoke | Dark Bronze | *292P9J | 00198934598561 | 300 |
| EAX1HSEGSBL M6 | EAX1 House side and external glare shield kit | Black Finish | *292PAT | 00198934598950 | 960 |
| EAX2HSEGSBL M6 | EAX2 House side and external glare shield kit | Black Finish | *292PAW | 00198934598981 | 378 |

## Specifications

**INTENDED USE:**

The EAX offers a complete area lighting package providing everything needed to replace 50W to 1000W HID area luminaires. This highly versatile luminaire features switchable technology including lumens, CCT and optics switching, allowing greater flexibility while helping reduce inventory costs. EAX is a great choice for new and retrofit pole mount applications exterior area lighting, parking lots, storage areas, retail and office spaces.

**CONSTRUCTION:**

Die-cast aluminum housing with heat-dissipating fins enhances LED efficacy and component life. Driver is accessible through a hinged die-cast aluminum door for easy maintenance. The light engine and driver compartment is completely sealed against moisture and environmental contaminants and rated IP66. The low-profile design results in a low EPA. EAX is rated for minimum 1.5 G vibration load per ANSI C136.31.

**ELECTRICAL:**

Light engine consists of high-efficacy LEDs mounted to metal-core circuit boards to maximize heat dissipation and promote long life (up to L74/100,000 hours at 25°C). The 0-10V dimming, electronic driver has a power factor of >90% and THD <20%. Standard 6KV surge protection.

**INSTALLATION:**

EAX offers a multi-use versatile adjustable tilt mounting arm that mounts to 3.0" min. O.D. round and 3.5" min. square poles and slip fits onto 2 3/8" pole top tenons. No-drill feature accommodates pre-existing pole drillings from 4.63" through 5.52" on center.

**LISTINGS:**

UL Listed to U.S. and Canadian safety standards for wet locations and IP66. Tested in accordance with IESNA LM-79 and LM-80 standards. Operating temperature -40C to 40C.

DesignLights Consortium® (DLC) Premium qualified product. Not all versions of this product may be DLC Premium qualified. Please check the DLC Qualified Products List at www.designlights.org/QPL to confirm which versions are qualified.

**WARRANTY:**

5-year limited warranty. This is the only warranty provided and no other statements in this specification sheet create any warranty of any kind. All other express and implied warranties are disclaimed. Complete warranty terms located at: www.acuitybrands.com/support/warranty/terms-and-conditions.

**Note**: Actual performance may differ as a result of end-user environment and application. All values are design or typical values, measured under laboratory conditions at 25 °C. Specifications subject to change without notice.

## Dimensions

All dimensions are inches (centimeters) unless otherwise indicated.

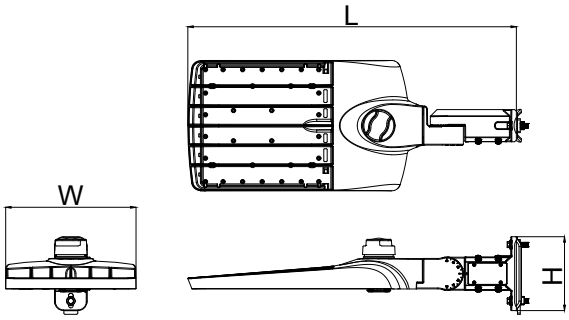


| Luminaire | Length (L) | Width (W) | Height (H) Max. | Weight | EPA |
|---|---|---|---|---|---|
| EAX1 | 29.8" (75.7 cm) | 11.8" (30.0 cm) | 6.7" (17.0 cm) | 14 lbs (6.4 kg) | 0.49 ft2 (0.05 m2) |
| EAX2 | 35.0" (90.0 cm) | 13.9" (35.3 cm) | 6.7" (17.0 cm) | 19 lbs (8.6 kg) | 0.65 ft2 (0.06 m2) |

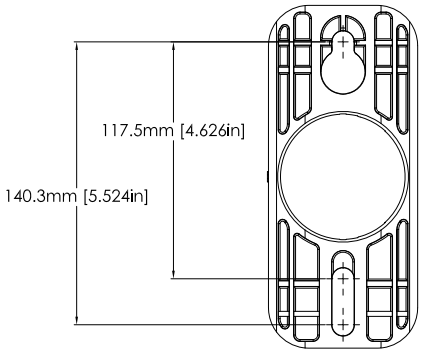



© 2025 Acuity Brands Lighting, Inc. All rights reserved. Rev. 10/21/25

| Catalog Number |
|---|
| Notes |
| Type |

Contractor Select™

# EAX1/EAX2 LED

## Area Luminaire

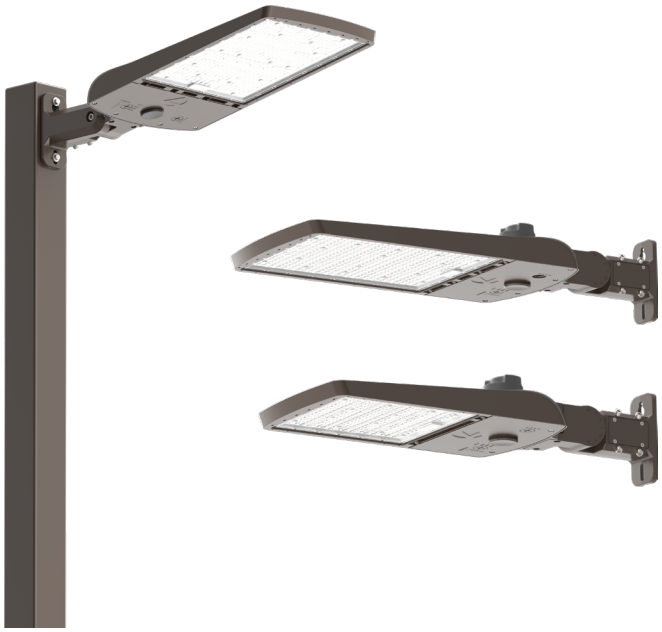

The EAX provides the best combination of switchable technology including adjustable lumens, switchable CCT color temperature and exclusive four-optic SwitchOptics™ providing Type II, III, IV and V distribution patterns; all from the same luminaire. This vast feature-set allows maximum versatility while managing the lowest possible SKUs required for site and pole mount lighting.

### FEATURES:

- EAX1 provides 5,000 to 16,000 lumens (50-250W and 400W replacement)
- EAX2 provides 18,000 to 30,000 lumens (400W to 1000W replacement)
- Each luminaire provides over 60 in-field configurations with the broadest array of switchable technology combined with (UPM) universal mounting.
- Easy access switching features Adjustable light output (ALO), switchable CCT (SWW2) and switchable optics (SO) including Type II, III, IV and V distributions.
- UPM universal pole mount with tilt for round and square poles, includes 2 3/8" built in pole top tenon fitter. (fits 3.5" min SQ and 3" min dia. RND side mount, 2 3/8" OD pole top tenon)
- All luminaires are sensor-ready and include a PER 3-pin NEMA twistlock photocell recpetacle with shorting cap and Acuity twist-to-lock sensor receptacle.

| Catalog | Lumens *(set on max) | Watts *(set on max) | CCT *(set on 40K) | Optics *(set on T3) | Voltage | Mounting Type | Finish | CI Code | UPC | Pallet Qty |
|---|---|---|---|---|---|---|---|---|---|---|
| EAX1 ALO SWW2 SO UVOLT UPM PER DDB | 5,000 -16,000 | 32 - 106 | 30K/40K/50K | T2, T3, T4, T5 | 120-347V | UPM ships included | Dark Bronze | *292P6U | 00198934597748 | 21 |
| EAX2 ALO SWW2 SO UVOLT UPM PER DDB | 18,000 - 30,000 | 112 - 213 | 30K/40K/50K | T2, T3, T4, T5 | 120-347V | UPM ships included | Dark Bronze | *292P7G | 00198934597946 | 24 |

Note: Not all EAX configurations or options are included in the Contractor Select program. More configurations are available. Visit www.acuitybrands.com.

**Accessories:** *Order as separate catalog number.*

| Catalog | Description | Finish | CI Code | UPC | Pallet Qty |
|---|---|---|---|---|---|
| EAX UPM DDB M6 | Universal tilt arm square/round & pole top tenon mount | Dark Bronze | *292P92 | 00198934598424 | 240 |
| EAX SRA DDB M6 | Standard square and round pole arm | Dark Bronze | *292P95 | 00198934598431 | 240 |
| EAX IS DDB M6 | Adjustable slipfitter | Dark Bronze | *292P9E | 00198934598530 | 360 |
| EAX ASRP DDB M6 | Adjustable tilt square and round pole arm | Dark Bronze | *292P9G | 00198934598547 | 270 |
| EAX WBA DDB M6 | Wall bracket adapter | Dark Bronze | *292P9H | 00198934598554 | 270 |
| EAX YK DDB M6 | Adjustable yoke | Dark Bronze | *292P9J | 00198934598561 | 300 |
| EAX1HSEGSBL M6 | EAX1 House side and external glare shield kit | Black Finish | *292PAT | 00198934598950 | 960 |
| EAX2HSEGSBL M6 | EAX2 House side and external glare shield kit | Black Finish | *292PAW | 00198934598981 | 378 |

## Specifications

**INTENDED USE:**

The EAX offers a complete area lighting package providing everything needed to replace 50W to 1000W HID area luminaires. This highly versatile luminaire features switchable technology including lumens, CCT and optics switching, allowing greater flexibility while helping reduce inventory costs. EAX is a great choice for new and retrofit pole mount applications exterior area lighting, parking lots, storage areas, retail and office spaces.

**CONSTRUCTION:**

Die-cast aluminum housing with heat-dissipating fins enhances LED efficacy and component life. Driver is accessible through a hinged die-cast aluminum door for easy maintenance. The light engine and driver compartment is completely sealed against moisture and environmental contaminants and rated IP66. The low-profile design results in a low EPA. EAX is rated for minimum 1.5 G vibration load per ANSI C136.31.

**ELECTRICAL:**

Light engine consists of high-efficacy LEDs mounted to metal-core circuit boards to maximize heat dissipation and promote long life (up to L74/100,000 hours at 25°C). The 0-10V dimming, electronic driver has a power factor of >90% and THD <20%. Standard 6KV surge protection.

**INSTALLATION:**

EAX offers a multi-use versatile adjustable tilt mounting arm that mounts to 3.0" min. O.D. round and 3.5" min. square poles and slip fits onto 2 3/8" pole top tenons. No-drill feature accommodates pre-existing pole drillings from 4.63" through 5.52" on center.

**LISTINGS:**

UL Listed to U.S. and Canadian safety standards for wet locations and IP66. Tested in accordance with IESNA LM-79 and LM-80 standards. Operating temperature -40C to 40C.

DesignLights Consortium® (DLC) Premium qualified product. Not all versions of this product may be DLC Premium qualified. Please check the DLC Qualified Products List at www.designlights.org/QPL to confirm which versions are qualified.

**WARRANTY:**

5-year limited warranty. This is the only warranty provided and no other statements in this specification sheet create any warranty of any kind. All other express and implied warranties are disclaimed. Complete warranty terms located at: www.acuitybrands.com/support/warranty/terms-and-conditions.

**Note**: Actual performance may differ as a result of end-user environment and application. All values are design or typical values, measured under laboratory conditions at 25 °C. Specifications subject to change without notice.

## Dimensions

All dimensions are inches (centimeters) unless otherwise indicated.

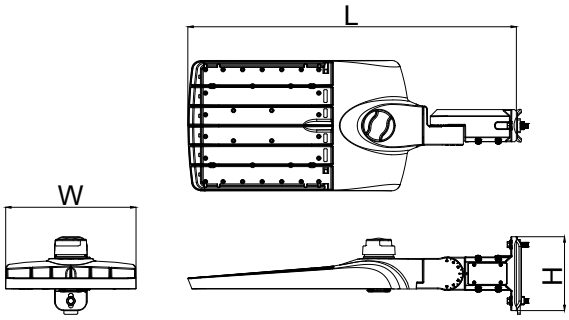


| Luminaire | Length (L) | Width (W) | Height (H) Max. | Weight | EPA |
|---|---|---|---|---|---|
| EAX1 | 29.8" (75.7 cm) | 11.8" (30.0 cm) | 6.7" (17.0 cm) | 14 lbs (6.4 kg) | 0.49 ft2 (0.05 m2) |
| EAX2 | 35.0" (90.0 cm) | 13.9" (35.3 cm) | 6.7" (17.0 cm) | 19 lbs (8.6 kg) | 0.65 ft2 (0.06 m2) |

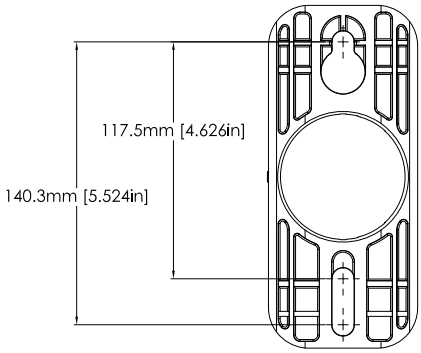



© 2025 Acuity Brands Lighting, Inc. All rights reserved. Rev. 10/21/25