GUP Junction Boxes

Cl. I, Div. 1 and 2, Groups C, D
Cl. II, Div. 1, Groups E, F, G
Cl. II, Div. 2, Groups F, G
Cl. III

Explosionproof
Dust-Ignitionproof
Raintight

Applications:

GUP series junction boxes are used in threaded rigid conduit systems in hazardous areas:

- To function as a junction or pull box
- Where space is limited such as in gasoline pumps
- Indoors or outdoors

Features:

- Compact in design
- Supplied with a variety of hubs (6 hubs and 3 plugs or 10 hubs and 7 plugs)
- Cover sealed with standard "O" ring gasket for raintight enclosure

Certifications and Compliances:

- NEC/CEC:
  Class I, Division 1 and 2, Groups C, D
  Class II, Division 1, Groups E, F, G
  Class II, Division 2, Groups F, G
  Class III
- UL Standard: 1203
- CSA Standard: C22.2 No. 30

Standard Materials:

- Bodies – *Feraloy*® iron alloy
- Covers – copper-free aluminum

Standard Finishes:

- *Feraloy* iron alloy – electrogalvanized and aluminum acrylic paint
- Copper-free aluminum – natural

Options:

Description	Suffix
Feraloy iron alloy covers	**WOD**

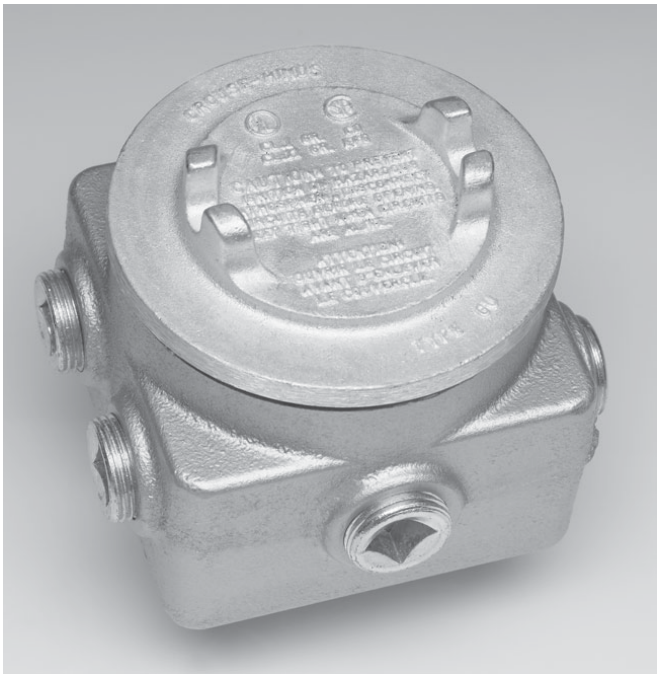

Ordering Information:

Top Hubs	Bottom Hubs	Side Hubs	Back Hubs	Cat. #
2–3/4"	2–3/4"	1–3/4"	None	**GUP215***
2–3/4"	2–3/4"	1–3/4"	4–3/4"	**GUP214†**
2–3/4"	2–3/4"	1–3/4"	4–1"	**GUP314‡**
2–1"	2–1"	1–1"	4–1"	**GUP315‡‡**

*Furnished with 3–3/4" pipe plugs.
†Furnished with 7–3/4" pipe plugs.
‡Furnished with 4–3/4" pipe plugs and 3–1" pipe plugs.
‡‡Furnished with 4-1" pipe plugs and 3-1" pipe plugs.

Dimensions
In Inches:

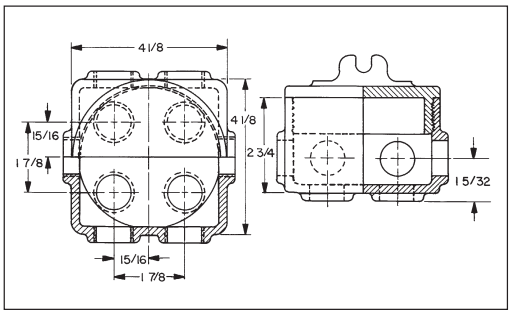

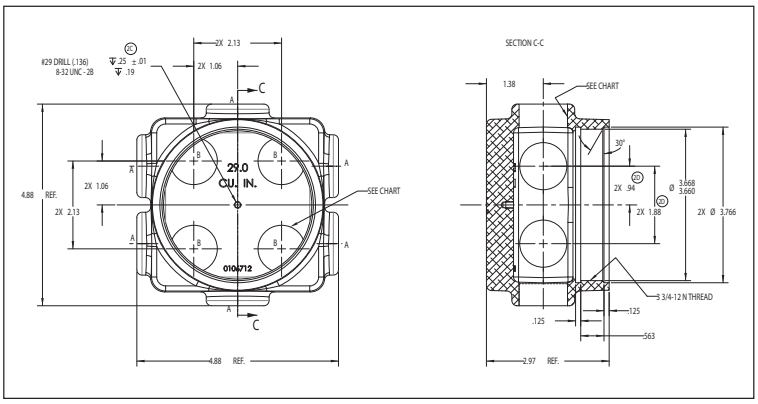

For conduit liner ordering information, see page 860.

GUP315 Only

 Copyright© 2013 Eaton's Crouse-Hinds Business