ELLIOTT ELECTRIC SUPPLY
We Deliver...Lower Cost, Quality Products, & Personal Service
8620 E 34th St N
Wichita, KS 67226-0000
Phone: 3162478220
Fax: 0000000000



L15T848G8CSJDX2 15W LED T8 48" 3K/35/4K/5K/65K SGL/DBL END-GLASS

KEYSTONE TECHNOLOGIES

Catalog Number	L15T848G8CSJDX2
Manufacturer	KEYSTONE TECHNOLOGIES
Description	Key KT-LED15T8-48G-8CSJ-DX2 15W LED
Weight per unit	0.6800 (lbs/each)
Product Category	Lighting

Features

Ballast Type	N/A
Circuit Type	N/A
Input Voltage	120-277V
Lamp Type	T8
Nominal Length	48 in
Nominal Size	N/A
Number Of Lamps	N/A
Output Current	N/A
Output Voltage	N/A
Sensor Type	N/A
Wattage	15
Wire Type	N/A
Beam Angle	240
Ip Rating	N/A
Lumens	2200

Material, Color, and Finish

Base Type	G13
Color Rendering Index (Cri)	>80 Deg
Color Temperature	N/A
Housing Color	N/A

Descriptions

Construction	Frosted Glass
Description	15W LED T8 48" 3K/35/4K/5K/65K SGL/DBL END-GLASS
Long Description	Key KT-LED15T8-48G-8CSJ-DX2 15W LED
Product Type	15W Led T8 Tube, 2200 Lumen, Glass Construction, 4FT, Color

Manufacturer Information

Brand	Keystone
GTIN	00843654140841
Manufacturers Part Number	KT-LED15T8-48G-8CSJ-DX2
UPC	891916

ELLIOTT ELECTRIC SUPPLY
We Deliver...Lower Cost, Quality Products, & Personal Service
8620 E 34th St N
Wichita, KS 67226-0000
Phone: 3162478220
Fax: 0000000000

Taxonomies, Classifications, and Categories

Category Description	LED LINEAR STRAIGHT(Fluor replacement), U-SHAPE & CIRCULAR LAMPS

Availability

Manufacturer Status	Inactive

Packaging

Carton	25
Weight Per Each	0.6800 (lbs/each)

Uses, Certifications, and Standards

Energy Star	N

SINCE 1945 KEYSTONE LIGHT MADE EASY

DIRECTDRIVE DX2
SINGLE- OR DOUBLE-ENDED LINE VOLTAGE LED TUBES

COLOR SELECT

KT-LED15T8-48GX-8CSJ-DX2
T8 LED LAMP

DESCRIPTION

15W T8 LED Lamp | 3000/3500/4000/5000/6500K | >80 CRI | High-Efficiency | Single- or Double-ended Line Voltage Wiring

RoHS Compliant

10 YEAR LIMITED WARRANTY

- **LAMP TYPE:** Linear
- **BULB TYPE:** T8 LED
- **BASE TYPE:** G13 (Medium Bi-Pin)
- **WATTAGE:** 15W
- **COLOR TEMPERATURE:** 3000/3500/4000/5000/6500K
- **COLOR RENDERING INDEX (CRI):** >80
- **WARRANTY:** 5 Years

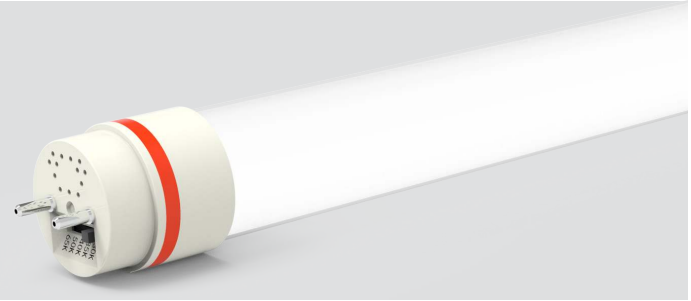

PRODUCT FEATURES

- Replacement for conventional fluorescent lamp
- Single- or double-ended line voltage wiring
- Keystone Color Select technology (3000/3500/4000/5000/6500K)
- Instant startup
- Frosted glass lens eliminates pixelation
- Approximately 60% more energy-efficient than standard F32T8 lamps
- Environmentally friendly: No mercury used
- 135+ Lumens per Watt
- Operating temperature: –20ºC/–4ºF to 45ºC/113ºF
- Storage temperature: –30ºC/–22ºF to 60ºC/140ºF
- Operating humidity: 10–80%
- Integral driver (isolated) eliminates the need for external driver or ballast
- Not compatible with Keystone AC emergency drivers: KT-EMRG-LED-5-500-AC, KT-EMRG-LED-5-500-AC/DF, KT-EMRG-LED-12-1200-AC, or KT-EMRG-LED-12-1200-AC /DF
- Not rated for use in Vapor Tight style fixtures
- Meets FCC Part 15, Class B
- 50,000+ hour lifetime
- UL Classified
- Lamp is dimmable when used with an appropriate dimming accessory (purchased separately). Contact Keystone for more details to find out what is best for the intended application.

COLOR SELECT (CCT) ADJUSTMENT

- This fixture is equipped with field-adjustable Keystone Color Select technology.
- Adjustable CCT (3000/3500/4000/5000/6500K).
- Adjust dip switch to desired setting (preset to 4000K CCT).



ELECTRICAL SPECIFICATIONS

Input Voltage	Power Consumption	CCT*	Lumen Output	Efficacy	CRI	Beam Angle	Visible Light Area	Power Factor	THD	Input Current	Lifetime
120–277 Vac 60Hz	15W	3,000K	2,050	136 lm/W	>80	240º	325º	>0.9	>20%	125mA @120V 53mA @277V	50,000 hrs
		3,500K	2,135	142 lm/W							
		4,000K	2,200	146 lm/W							
		5,000K	2,200	146 lm/W							
		6,500K	2,125	142 lm/W							

** Preset to 4000K CCT; Color Uniformity: CCT (Correlated Color Temperature) range as per guidelines outlined in ANSI C78.377-2017*

SINCE 1945 KEYSTONE LIGHT MADE EASY

DIRECT DRIVE DX2
SINGLE- OR DOUBLE-ENDED LINE VOLTAGE LED TUBES

COLOR SELECT

KT-LED15T8-48GX-8CSJ-DX2
T8 LED LAMP

WIRING DIAGRAMS

WARNING: NOT COMPATIBLE WITH KEYSTONE AC EMERGENCY BACKUPS

SINGLE-ENDED WIRING DIAGRAM

1. Cut all existing connections to ballast as shown below and remove ballast. See Figure A for typical ballast configurations. **Note: Single-ended wiring requires non-shunted lampholders.**

FIGURE A **Typical Ballast Wiring Configurations**

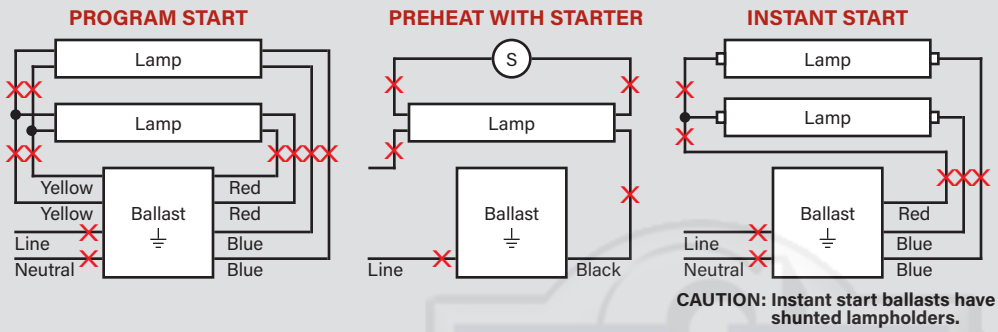

2. Rewire fixture as shown below.

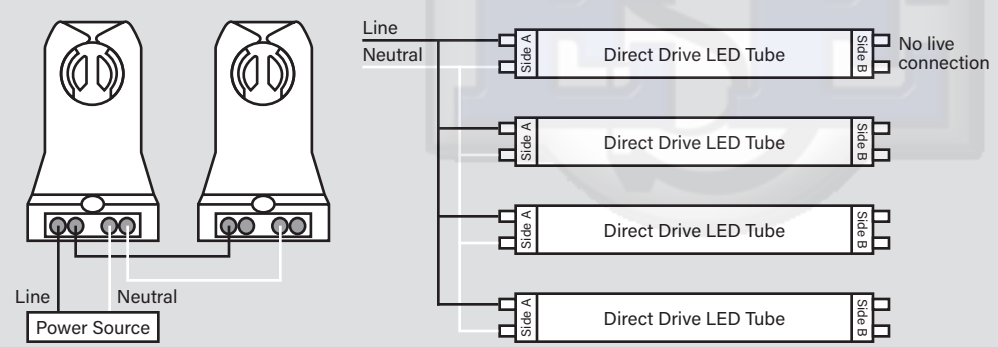

TYPICAL NON-SHUNTED LAMPHOLDER

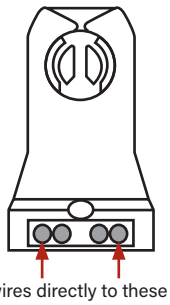

CAUTION: FOR SINGLE-ENDED WIRING USE *ONLY* NON-SHUNTED LAMPHOLDERS.

For Single-ended wiring, do not install product in a fixture with shunted lampholders (found in all fixtures using instant start ballasts). If the current lampholders are shunted, remove them and replace them with non-shunted lampholders. Make new connections directly to terminals as indicated above. Keystone can provide any style replacement lampholders. Call us at 800-464-2680.

DOUBLE-ENDED WIRING DIAGRAM

1. Cut all existing connections to ballast as shown below and remove ballast. See Figure A above for typical ballast configurations.
2. Re-wire fixture as shown below. For double-ended wiring, use either shunted or nonshunted lampholders.

NOTE: There should not be any exposed wires at the end of installation.

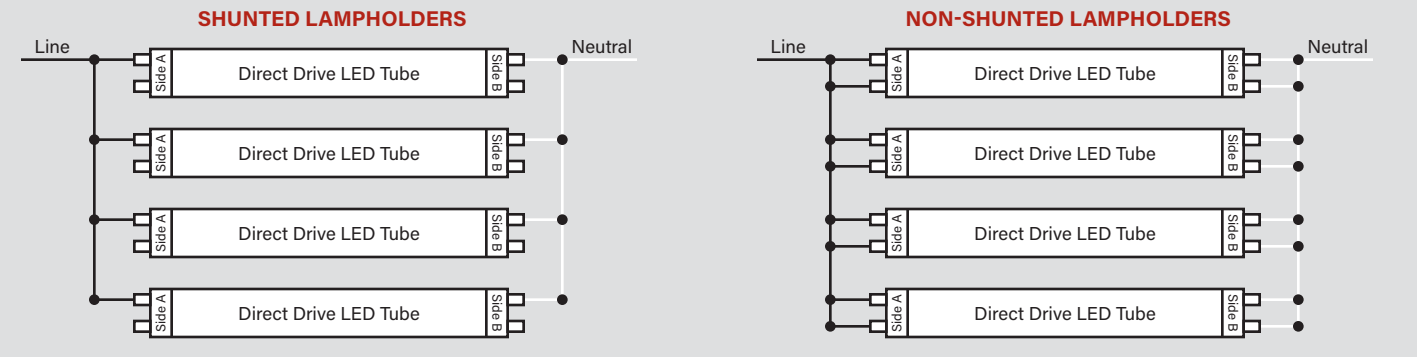

KEYSTONE SINCE 1945 LIGHT MADE EASY

DIRECTDRIVE DX2
SINGLE- OR DOUBLE-ENDED LINE VOLTAGE LED TUBES

COLOR SELECT

KT-LED15T8-48GX-8CSJ-DX2
T8 LED LAMP

PHOTOMETRIC SPECIFICATIONS

SPECTRAL DISTRIBUTION

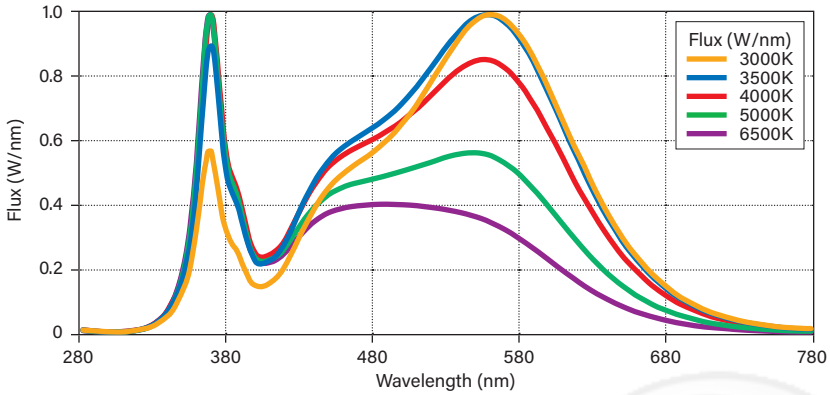

PHYSICAL SPECIFICATIONS

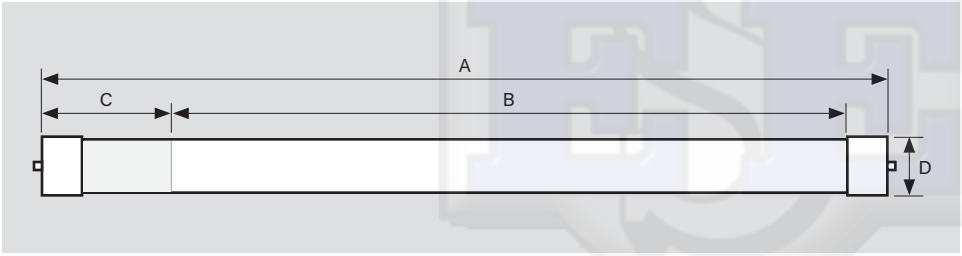

LAMP DIMENSIONS

A (Body Length)	47.20"
B (Illuminated Length)	44.00"
C (End Cap/Sticker Area)	2.25"
D (Diameter)	1.10"

NOMINAL LENGTH: 48"
BASE TYPE: G13 (Medium Bi-Pin)

ORDERING INFORMATION

ORDER CODE	CARTON QUANTITY	UPC	EASY CODE	DLC PRODUCT ID
KT-LED15T8-48G-8CSJ-DX2	25 pcs	843654140841	QWC-62	S-UD3RQB
KT-LED15T8-48GC-8CSJ-DX2	25 pcs	843654171036	ZJZ-98	TBD

CATALOG NUMBER BREAKDOWN

KT-LED15T8-48GX-8CSJ-DX2

1 2 3 4 5 6 7 8 9 10

1 **Keystone Technologies**
2 **LED Lamp**
3 **Wattage**
4 **Lamp Type**
5 **Nominal Length (Inches)**
6 **Construction Type**
7 **CRI**
8 **Color Select**
9 **Color Select Designation**
10 **Single- or Double-Ended Line Voltage Wiring**

6 Construction Type

G	Glass
GC	Glass Coated

9 Color Select Designation

J	3000/3500/4000/5000/6500K