ELLIOTT ELECTRIC SUPPLY
We Deliver...Lower Cost, Quality Products, & Personal Service
2310 N. Stallings Dr.
Nacogdoches, TX 75964-0
Phone: 9365697941
Fax: 9365604685



# LB1 1" PVC TYPE LB CONDULET

*CANTEX,INC*

| | |
|---|---|
| Catalog Number | LB1 |
| Manufacturer | CANTEX,INC |
| Description | CANTEX 5133665 is a 1 in. Conduit Body Type LB which provides pull, splice, and tap access for conductors in a conduit system along with a change in direction |
| Weight per unit | 0.4000 (lbs/each) |
| Product Category | PVC Conduit Fittings & Accy |

## Dimensions and Weight

| | |
|---|---|
| Size | 1 |

## Descriptions

| | |
|---|---|
| Description | 1" PVC TYPE LB CONDULET |
| Features | CANTEX 5133665 is a 1 in. Conduit Body Type LB which provides pull, splice, and tap access for conductors in a conduit system along with a change in direction |
| Long Description | CANTEX 5133665 is a 1 in. Conduit Body Type LB which provides pull, splice, and tap access for conductors in a conduit system along with a change in direction |
| Product Type | 1 Ul-LB Access FTG |
| Extra Long Description | CTX 5133665 1 UL-LB ACCESS FTG |

## Manufacturer Information

| | |
|---|---|
| Brand | PVC & Accessories |
| | CANTEX INC. |
| GTIN | 00088700567665 |
| Manufacturers Part Number | 5133665 |
| UPC | 881780 |

## Taxonomies, Classifications, and Categories

| | |
|---|---|
| Category Description | PVC CONDULETS |
| Type | Conduit Body Type LB |

## Trade Size

| | |
|---|---|
| Trade Size | 1 |

## Packaging

| | |
|---|---|
| Carton | 10 |
| Weight Per Each | 0.4000 (lbs/each) |

## Uses, Certifications, and Standards

| | |
|---|---|
| Standard | UL Listed;UL, Made in USA |

# Conduit Bodies

CANTEX

## Conduit Bodies - Type LB

### 1/2" THROUGH 2"



Conduit Body Type LB provides pull, splice, and tap access for conductors in a conduit system along with a change in direction. Type LB Conduit Bodies are used to make a 90-degree turn in a conduit run with one opening on top and one opening exiting from the back opposite the cover.

- Durable non-conductive PVC will not rust or corrode
- For use with Schedule 40 & 80 conduit
- Includes lid, gasket, and screws
- UL listed
- Made in USA

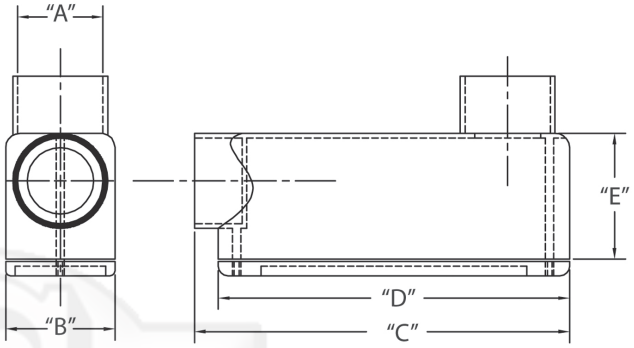


### 2-1/2" THROUGH 4"



| Part Number | Trade Size | Carton Quantity | "A" | "B" | "C" | "D' | "E" | Volume Cu. In. | 3-Wire Fill |
|---|---|---|---|---|---|---|---|---|---|
| 5133663 | 1/2 | 25 | .875 | 1.313 | 4.188 | 4.000 | 1.438 | 4.3 | #6 or smaller |
| 5133664 | 3/4 | 15 | 1.063 | 1.500 | 4.938 | 4.625 | 1.625 | 6.5 | #6 or smaller |
| 5133665 | 1 | 10 | 1.313 | 1.750 | 5.875 | 5.375 | 2.000 | 11.8 | #6 or smaller |
| 5133666 | 1-1/4 | 10 | 1.688 | 2.500 | 7.563 | 7.188 | 2.375 | 25.0 | XHHW #1 |
| 5133667 | 1-1/2 | 10 | 1.875 | 2.625 | 8.563 | 8.000 | 2.750 | 36.5 | XHHW #2/0 |
| 5133668 | 2 | 5 | 2.375 | 3.125 | 9.813 | 9.563 | 3.375 | 63.5 | XHHW #4/0 |
| 5133669 | 2-1/2 | 5 | 2.875 | 4.625 | 15.000 | 12.875 | 4.563 | 198.0 | XHHW 500 MCM |
| 5133670 | 3 | 5 | 3.643 | 4.625 | 15.125 | 12.875 | 4.563 | 198.0 | XHHW 500 MCM |
| 5133671 | 3-1/2 | 4 | 4.000 | 5.625 | 16.188 | 12.875 | 5.500 | 305.0 | XHHW 500 MCM |
| 5133672 | 4 | 4 | 4.000 | 5.625 | 16.188 | 12.875 | 5.500 | 305.0 | XHHW 500 MCM |

Dimensions are nomina



## SINGLE SOURCE FOR PVC ELECTRICAL

CANTEX offers a complete line of PVC Conduit Bodies as part of a full line PVC electrical products. The CANTEX Conduit Body line includes multiple sizes of Type LB, Type LL, Type LR, Type T, Type C, and Type E Conduit Bodies.

With several decades of experience manufacturing PVC conduit, fittings and accessories, you can trust CANTEX to provide quality products. To see our complete line of PVC Conduit Bodies or our full line of PVC electrical products visit www.cantexinc.com.