ELLIOTT ELECTRIC SUPPLY
We Deliver...Lower Cost, Quality Products, & Personal Service
2310 N. Stallings Dr.
Nacogdoches, TX 75964-0
Phone: 9365697941
Fax: 9365604685



PVC8X8X4 8X8X4 PVC JUNCTION BOX

CANTEX,INC

Catalog Number	PVC8X8X4
Manufacturer	CANTEX,INC
Description	CANTEX 5133712 is a 8 in. x 8 in. x 4 in. Junction Box designed to support electrical devices and fixtures as well as providing protection for wires and terminals
Weight per unit	3.0 (lbs/each)
Product Category	PVC Bodies & Boxes

Features

Material	PVC
Mounting Type	Screw
Insulation	True

Material, Color, and Finish

Color	Gray

Dimensions and Weight

Depth	8.625
Height	8
Size	Non-Applicable
Width	8

Descriptions

Features	CANTEX 5133712 is a 8 in. x 8 in. x 4 in. Junction Box designed to support electrical devices and fixtures as well as providing protection for wires and terminals
Long Description	CANTEX 5133712 is a 8 in. x 8 in. x 4 in. Junction Box designed to support electrical devices and fixtures as well as providing protection for wires and terminals
Product Type	8 X 8 X 4 Junction Box
Special Features	Neoprene Gasket
Extra Long Description	CTX 5133712 8 X 8 X 4 JUNCTION BOX

Manufacturer Information

Brand	PVC & Accessories
	CANTEX INC.
GTIN	00088700517974
Manufacturers Part Number	5133712
UPC	881780

Taxonomies, Classifications, and Categories

Category Description	PVC BOXES
Type	Molded Junction Box

ELLIOTT ELECTRIC SUPPLY
We Deliver...Lower Cost, Quality Products, & Personal Service
2310 N. Stallings Dr.
Nacogdoches, TX 75964-0
Phone: 9365697941
Fax: 9365604685

Trade Size

Trade Size	8 x 8 x 4

Packaging

Carton	5
Weight Per Each	3.0 (lbs/each)

Uses, Certifications, and Standards

Application	JUNCTION BOX
Mounting	zinc plated steel screws
Nema Rating	1;3;3S;4;4X;5;6;6P
Standard	UL Marine Listed

PVC Junction Boxes

CANTEX

Junction Box

Junction Boxes are designed to support electrical devices and fixtures. They also provide necessary protection for wires and terminals.

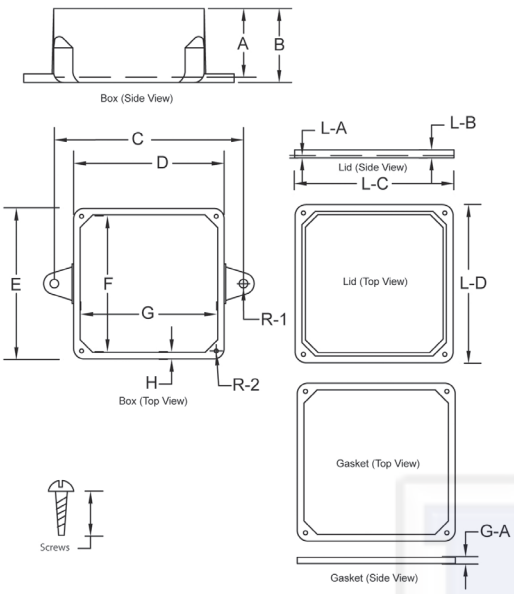

Molded Junction Box



- Material is Rigid PVC
- Neoprene gasket with zinc plated steel screws
- UL Listed, UL Marine Listed
- Made in USA

UL Catagory - QCUP
UL File #E205935
Control #92CM

Fabricated Junction Box

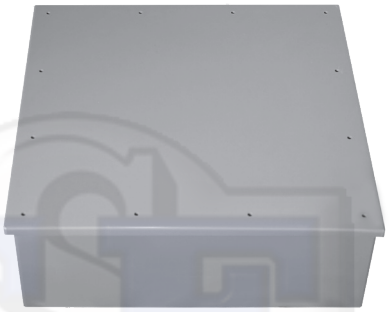

- Material is Rigid PVC
- Neoprene gasket with zinc plated steel screws
- Fully gasketed cover
- Made in USA
- See certifications below

Part Number	Trade Size	Description	Carton Qty.	Junction Box Base										Cover				Screws
				"A"	"B"	"C"	"D"	"E"	"F"	"G"	"H"	"J"	"K"	"A"	"B"	"C"	"D"	
5133705[1]	4x4x2	Molded	10	2.000	2.150	5.375	4.400	4.400	4.000	4.000	.250	.125	.160	.240	.370	4.375	4.375	#8 x 1/2"
5133709[1]	4x4x4	Molded	10	4.000	4.150	5.375	4.400	4.400	4.000	4.000	.250	.188	.160	.240	.700	4.375	4.375	#8 x 1/2"
5133707[1]	4x4x6	Molded	10	6.000	6.150	5.375	4.400	4.400	4.000	4.000	.250	.188	.160	.240	.370	4.375	4.375	#8 x 1/2"
5133706[1]	5x5x2	Molded	10	2.000	2.170	6.375	5.375	5.375	5.000	5.000	.250	.188	.170	.180	.267	5.375	5.375	#8 x 1/2"
5133710[1]	6x6x4	Molded	10	4.000	4.200	7.375	6.438	6.438	6.000	6.000	.250	.188	.220	.180	.350	6.750	6.750	#8 x 1/2"
5133711[1]	6x6x6	Molded	5	6.000	6.250	7.375	6.438	6.438	6.000	6.000	.250	.188	.220	.180	.350	6.750	6.750	#8 x 1/2"
5133712[1]	8x8x4	Molded	5	4.000	4.250	9.375	8.625	8.625	8.000	8.000	.250	.188	.220	.180	.350	9.000	9.000	#10 x 3/4"
5133164[1]	8x8x6	Molded	4	6.000	6.250	9.375	8.625	8.625	8.000	8.000	.250	.188	.220	.180	.350	9.000	9.000	#10 x 3/4"
5133708[1]	8x8x7	Molded	4	7.000	7.250	9.375	8.625	8.625	8.000	8.000	.250	.188	.220	.180	.350	9.000	9.000	#10 x 3/4"
5133714[1]	12x12x4	Molded	2	4.000	4.250	13.625	12.625	12.625	11.875	11.875	.250	.188	.220	.220	.437	13.000	13.000	#10 x 3/4"
5133713[1]	12x12x6	Molded	2	6.000	6.250	13.750	12.625	12.625	11.875	11.875	.250	.188	.220	.220	.437	13.000	13.000	#10 x 3/4"
*5133176	12x12x12	Fab	1	--	--	--	--	--	--	--	--	--	--	--	--	--	--	--
**5133163	16x14x6	Molded	1	6.00	6.250	16.000	14.875	16.875	16.435	14.435	.220	.125	.220	.214	.500	17.125	17.125	#10 x 3/4"
*5133167	18x18x6	Fab	1	--	--	--	--	--	--	--	--	--	--	--	--	--	--	--
*5133165	24x18x8	Fab	1	--	--	--	--	--	--	--	--	--	--	--	--	--	--	--
*5133161	24x18x12	Fab	1	--	--	--	--	--	--	--	--	--	--	--	--	--	--	--
*5133177	24x24x6	Fab	1	--	--	--	--	--	--	--	--	--	--	--	--	--	--	--
*5133166	24x24x8	Fab	1	--	--	--	--	--	--	--	--	--	--	--	--	--	--	--
*5133173	36x24x8	Fab	1	--	--	--	--	--	--	--	--	--	--	--	--	--	--	--

Dimensions are nominal

* Not UL Listed - 4X NEMA Rating

** UL Listed with only a Type 1 NEMA Rating

1. NEMA Ratings for Types, 1, 3, 3S, 4, 4X, 5, 6, and 6P