ELLIOTT ELECTRIC SUPPLY
We Deliver...Lower Cost, Quality Products, & Personal Service
2310 N. Stallings Dr.
Nacogdoches, TX 75964-0
Phone: 9365697941
Fax: 9365604685



SW1BB PORCELIN INSULATOR

ABB INSTALLATION PRODUCTS, INC

Catalog Number	SW1BB
Manufacturer	ABB INSTALLATION PRODUCTS, INC
Description	Wire Holder, 1-11/16 in (Screw) Overall Length, Steel, 0.25 lb
Weight per unit	0.2500 (lbs/each)
Product Category	Racks, Brackets, & Insulators

Features

Knockouts	FALSE
Material	Steel

Descriptions

Description	PORCELIN INSULATOR
Long Description	Holder, Wire, Head Length 1.97 Inches, Hole Diameter 0.26 Inches, Screw Length 1-11/16 Inch, Porcelain
Product Type	Wire HLDR LEN1.97IN Dia.26IN Porcel
Extra Long Description	TB SW1BB WIRE HLDR LEN1.97IN DIA.26
Similar Brands	House Knob

Manufacturer Information

Brand	ABB - Installation Products Steel City
GTIN	00783786300211
UPC	786210

Taxonomies, Classifications, and Categories

Category Description	SERVICE ENTRANCE FITTINGS: Weatherheads & Grounding Fittings & Ground Rods
Type	Hardware & Accessories

Availability

Status	Inactive

Packaging

Carton	36
Weight Per Each	0.2500 (lbs/each)

Uses, Certifications, and Standards

Application	To support service entrance cable prior to entrance

Steel City

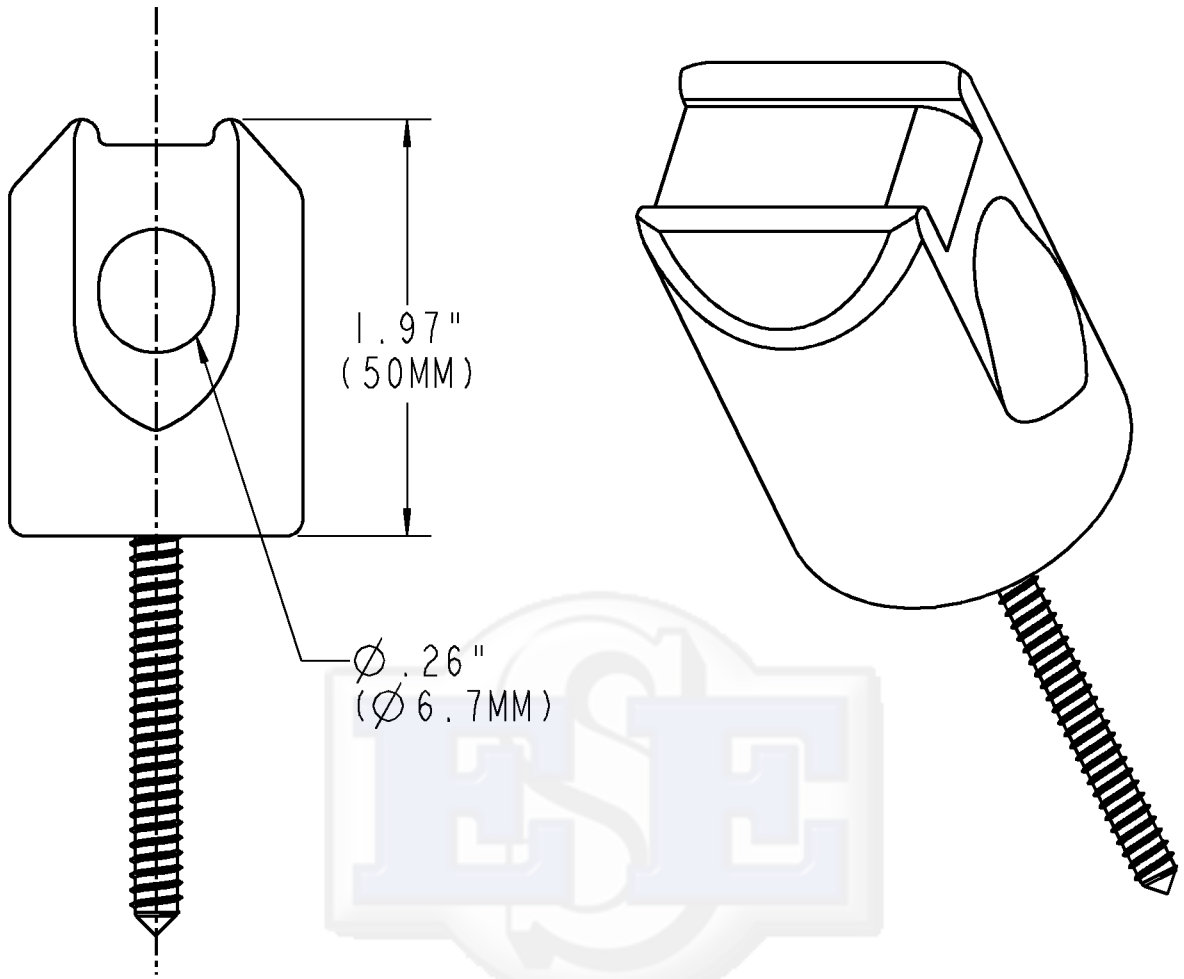

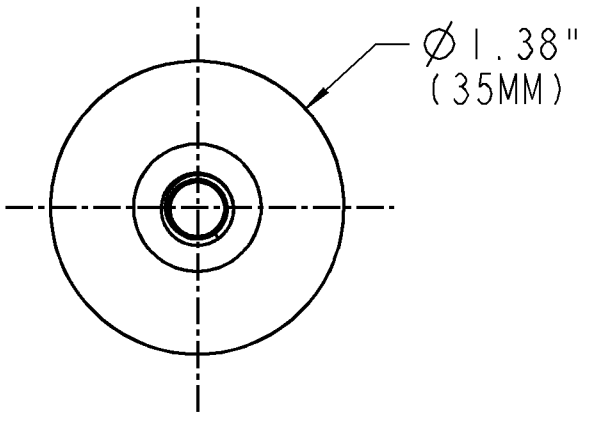

CATALOG NO. SW1BB
PORCELAIN WIRE HOLDER
MIDGET INSULATOR
SCREW LENGTH 1-11/16"
MAXIMUM PULL: 600 LBF
(272.4 KGF)

GENERAL NOTES

1. ALL DIMENSIONS ARE FOR REFERENCE ONLY.
2. DIMENSIONS IN BRACKETS [ ] ARE IN METRIC UNITS.

REVISIONS

- SEE ERN (****) FOR APPROVAL SIGNATURES & RELEASE DATE. PROJECT NO: ****

Thomas&Betts
www.tnb.com

DESCRIPTION: **SW1BB**
PORCELAIN WIRE HOLDER

ORIGINAL PROJECT NO / (ERN NO)	SHEET NO:	REV. NO:	DRAWING NO:
RM401839 / (2012724)	1 OF 1	-	WSD-000614

THIS DRAWING IS INTENDED FOR DESCRIPTIVE PURPOSES ONLY. AND THE RIGHT IS RESERVED TO DEVIATE FROM ANY OF THE DETAILS SHOWN HEREON.
©Thomas & Betts - Proprietary, All Rights Reserved