ELLIOTT ELECTRIC SUPPLY
We Deliver...Lower Cost, Quality Products, & Personal Service
2310 N. Stallings Dr.
Nacogdoches, TX 75964-0
Phone: 9365697941
Fax: 9365604685



SW2BB 2-1/4" MEDIUM DUTY SCREW TYPE WIRE HOLDER

ABB INSTALLATION PRODUCTS, INC

Catalog Number	SW2BB
Manufacturer	ABB INSTALLATION PRODUCTS, INC
Description	Wire Holder, 2-1/4 in (Screw) Overall Length, Porcelain Material, 0.66 lb
Weight per unit	0.6640 (lbs/each)
Product Category	Racks, Brackets, & Insulators

Dimensions and Weight

Size	Screw Length 2-1/4 Inch

Descriptions

Description	2-1/4" MEDIUM DUTY SCREW TYPE WIRE HOLDER
Long Description	Holder, Wire, Head Length 3 Inches, Hole Diameter 0.72 x 0.69 Inches, Screw Length 2-1/4 Inch, Porcelain
Product Type	Wireholder (Medium Duty Ins.)
Special Features	Midget insulator
Extra Long Description	TB SW2BB WIREHOLDER (MEDIUM DUTY IN

Manufacturer Information

Brand	ABB - Installation Products Steel City
GTIN	00783786300228
UPC	786210

Taxonomies, Classifications, and Categories

Category Description	SERVICE ENTRANCE FITTINGS: Weatherheads & Grounding Fittings & Ground Rods
Type	Hardware & Accessories

Packaging

Carton	36
Weight Per Each	0.6640 (lbs/each)

Uses, Certifications, and Standards

Application	To support service entrance cable prior to entrance

Steel City

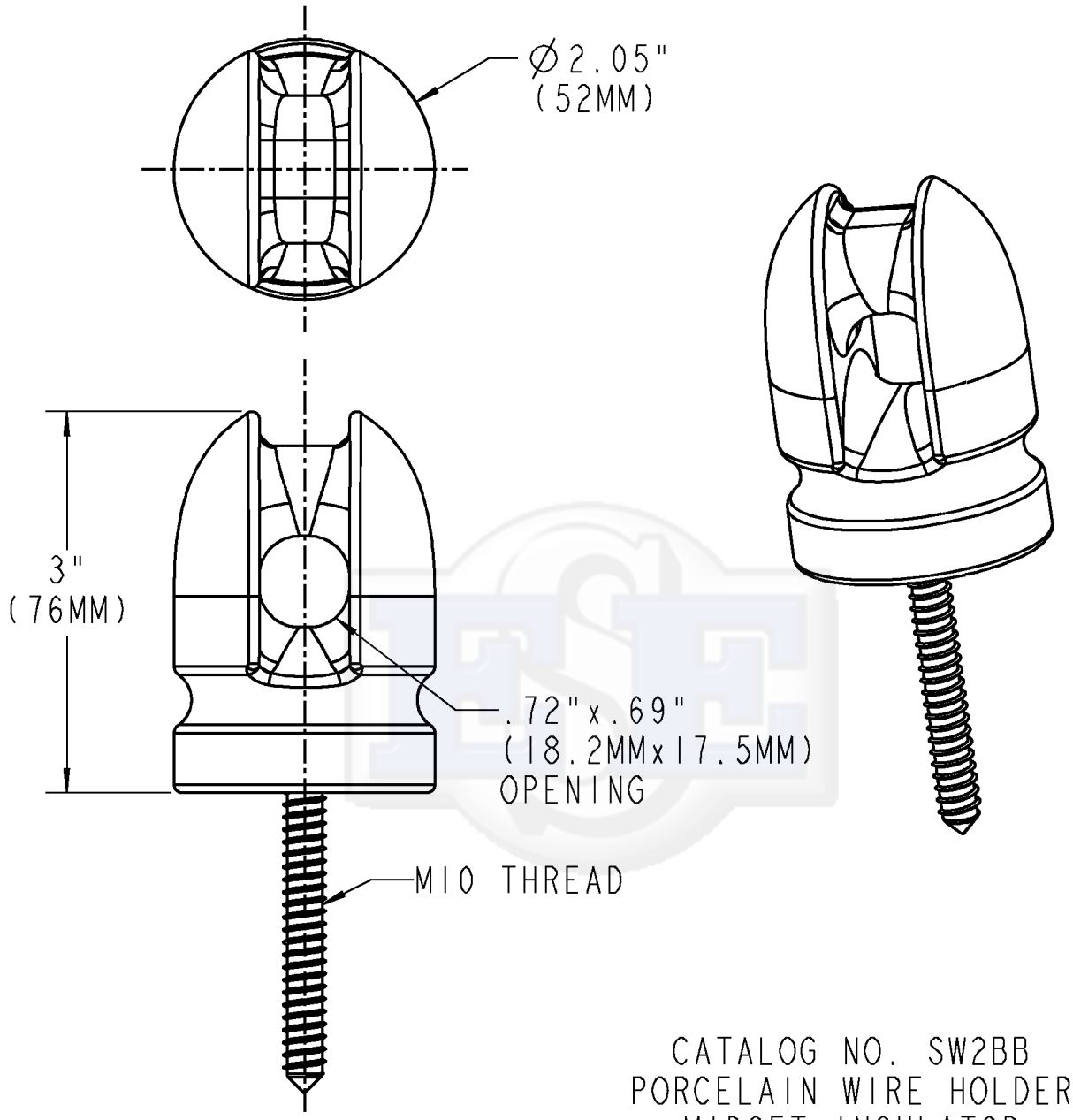

CATALOG NO. SW2BB
PORCELAIN WIRE HOLDER
MIDGET INSULATOR
SCREW LENGTH 2-1/4"
MAXIMUM PULL: 1100 LBF
(500 KGF)

GENERAL NOTES

1. ALL DIMENSIONS ARE FOR REFERENCE ONLY.
2. DIMENSIONS IN BRACKETS [ ] ARE IN METRIC UNITS.

REVISIONS

- SEE ERN (****) FOR APPROVAL SIGNATURES & RELEASE DATE. PROJECT NO: ****

Thomas&Betts
www.tnb.com

DESCRIPTION: **SW2BB**
PORCELAIN WIRE HOLDER

ORIGINAL PROJECT NO / (ERN NO)	SHEET NO:	REV. NO:	DRAWING NO:
RM401839 / (2012617)	1 OF 1	-	WSD-000610

THIS DRAWING IS INTENDED FOR DESCRIPTIVE PURPOSES ONLY. AND THE RIGHT IS RESERVED TO DEVIATE FROM ANY OF THE DETAILS SHOWN HEREON.
©Thomas & Betts - Proprietary, All Rights Reserved