ELLIOTT ELECTRIC SUPPLY
We Deliver...Lower Cost, Quality Products, & Personal Service
2310 N. Stallings Dr.
Nacogdoches, TX 75964-0
Phone: 9365697941
Fax: 9365604685



W33 2-1/2" INS WIREHOLDER

ABB INSTALLATION PRODUCTS, INC

Catalog Number	W33
Manufacturer	ABB INSTALLATION PRODUCTS, INC
Description	2-1/2 inch pipe mounted wire holder.
Weight per unit	0.8530 (lbs/each)
Product Category	Racks, Brackets, & Insulators

Features

Material	Steel

Descriptions

Description	2-1/2" INS WIREHOLDER
Long Description	2-1/2 inch pipe mounted wire holder.
Product Type	Pipe Mounted Wire Holder 2.5in
Extra Long Description	TB W33 PIPE MOUNTED WIRE HOLDER 2.5

Manufacturer Information

Brand	ABB - Installation Products Steel City
GTIN	00783786300198
UPC	786210

Taxonomies, Classifications, and Categories

Category Description	SERVICE ENTRANCE FITTINGS: Weatherheads & Grounding Fittings & Ground Rods
Type	Hardware & Accessories

Packaging

Carton	50
Weight Per Each	0.8530 (lbs/each)

Uses, Certifications, and Standards

Application	To support service entrance cable prior to entrance

Steel City

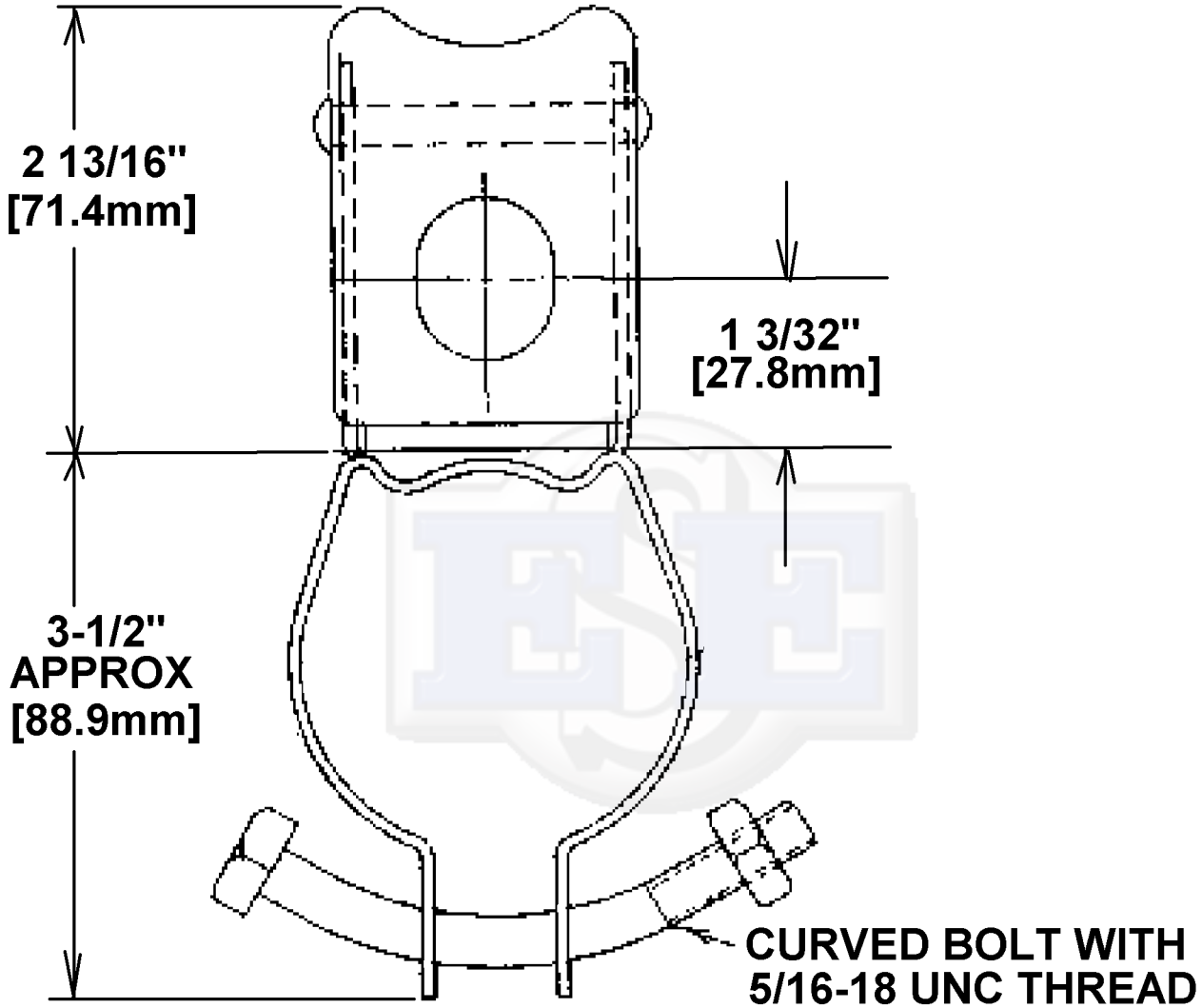

CATALOG NO. W33
PORCELAIN WIRE HOLDER PIPE MOUNTED,
2-1/2" [63mm]CONDUIT SIZE
MAXIMUM PULL 1500 LBSF[681 KGF]

GENERAL NOTES

1. ALL DIMENSIONS ARE FOR REFERENCE ONLY.
2. DIMENSIONS IN BRACKETS [ ] ARE IN METRIC UNITS.

REVISIONS

** SEE ERN (****) FOR APPROVAL SIGNATURES & RELEASE DATE. PROJECT NO: ****

www.tnb.com

Thomas&Betts
A Member of the ABB Group

DESCRIPTION: **W33 INSULATOR (WIREHOLDER)**

ORIGINAL PROJECT NO / (ERN NO)	SHEET NO:	REV. NO:	DRAWING NO:
RM401839 / (2015581)	1 OF 1	-	WSD-001277

THIS DRAWING IS INTENDED FOR DESCRIPTIVE PURPOSES ONLY. AND THE RIGHT IS RESERVED TO DEVIATE FROM ANY OF THE DETAILS SHOWN HEREON.
COPYRIGHT THOMAS & BETTS CORPORATION. ALL RIGHTS RESERVED. PROPRIETARY AND CONFIDENTIAL.